PETROBRAS	MEMÓRIA DE CÁLCULO	NO.	MC- 5275.00-2316-570-BAR-301
	CLIENTE: RECAP – REFINARIA DE CAPUAVA		FOLHA: 1 de 101
	PROGRAMA: CARTEIRA DE HIDROTRATAMENTOS		
	ÁREA: U-2316-UHDS-UNIDADE DE HIDROSSULFURIZAÇÃO DE NAFTA CRAQUEADA		
ENGENHARIA / IEABAST / IECAP	TÍTULO: REATOR DE SEGUNDO ESTÁGIO HDS K-2316004		

BARDELLA

CV 10683

PROGRAMA:	EXCEL 2000
ARQUIVO:	MC- 5275.00-2316-570-BAR-301
N° PCS	N° RM
4502400387	I-RM-5275.00-2316-570-PEI-001=A
TÉC. RESPONSÁVEL	N° CREA
VALDIR DEL REY	0600616884

ÍNDICE DE REVISÕES

Rev	DESCRIÇÃO E/OU FOLHAS ATINGIDAS
0	PRIMEIRA EMISSÃO - PARA APROVAÇÃO
A	ATENDIDO COMENTÁRIOS DO CLIENTE
B	ATENDIDO COMENTÁRIOS DO CLIENTE - CERTIFICADO
C	ATENDIDO COMENTÁRIOS DO CLIENTE - CERTIFICADO
D	REVISADO CONFORME CONSTRUÍDO – CERTIFICADO

PROJECTUS CONSULTORIA LTDA.

A	APROVADO. Enviar documento certificado. PROSSEGUIR com a fabricação.
B	APROVADO COM COMENTÁRIOS. Revisar o documento atendendo comentários. Reenviar para aprovação. NÃO PROSSEGUIR com a fabricação.
C	APROVADO COM COMENTÁRIOS. Revisar documento atendendo comentários. Enviar cópia certificada. PROSSEGUIR com a fabricação.
D	REJEITADO. Reenviar para aprovação. NÃO PROSSEGUIR com a fabricação
E	ACEITE DO CERTIFICADO.
F	PARA INFORMAÇÃO.

ASS THY2/NKY1 DATA 02/08/10

A APROVAÇÃO E OS COMENTÁRIOS FEITOS NESTE DOCUMENTO NÃO EXIMEM O FORNECEDOR DA RESPONSABILIDADE SOBRE O PROJETO, FABRICAÇÃO E O DESEMPENHO DO EQUIPAMENTO OU SISTEMA.

REV. D - 20/04/2010

SERVIÇO ESPECIAL

H2

Openso

DOCUMENT APPROVED

KG /15JULY2010

	REV. 0	REV. A	REV. B	REV. C	REV. D	REV. E	REV. F	REV. G	REV. H
DATA	18/05/2009	21/12/2009	3/2/2010	22/4/2010	15/7/2010				
PROJETO	BARDELLA	BARDELLA	BARDELLA	BARDELLA	BARDELLA				
EXECUÇÃO	OPENSO	OPENSO	OPENSO	OPENSO	OPENSO				
VERIFICAÇAO	OPENSO	OPENSO	OPENSO	OPENSO	OPENSO				
APROVAÇÃO	VALDIR	VALDIR	VALDIR	VALDIR	VALDIR				

AS INFORMAÇÕES DESTE DOCUMENTO SÃO PROPRIEDADE DA PETROBRAS, SENDO PROIBIDA A UTILIZAÇÃO FORA DA SUA FINALIDADE.

Table of Contents

Cover Sheet 3
Title Page 4
Flange Calculations MW FLANGE 5
Flange Calculations MW COVER 9
Internal Pressure Calculations 12
Element and Detail Weights 15
Nozzle Flange MAWP 17
Natural Frequency Calculation 18
Wind Load Calculation 19
Wind/Earthquake Shear, Bending 21
Wind Deflection 22
Longitudinal Stress Constants 23
Longitudinal Allowable Stresses 24
Longitudinal Stresses Due to 25
Stress due to Combined Loads 27
Center of Gravity Calculation 31
Basering Calculations 32
Nozzle Calcs. Noz 2 36
Nozzle Calcs. Noz 11 A/B 42
Nozzle Calcs. Noz 8A/B 48
Nozzle Calcs. Noz 9 54
Nozzle Calcs. Noz 13 60
Nozzle Calcs. Noz 12 A/B 63
Nozzle Calcs. Noz10 67
Nozzle Calcs. Noz 1 73
Nozzle Schedule 76
Nozzle Summary 77
Vessel Design Summary 78
Skirt Opening Reinforcement 80
Thermal Expansion Calculation 82
Vessel Classification 83
Vessel Lifting Calculation 84
Elbow Lift Lug Calculations 100

DESIGN CALCULATION

In Accordance with ASME Section VIII Division 1

ASME Code Version : 2004, Addenda A-06

Analysis Performed by : OPENSO

Job File : Y:\AAOPENSO 2008 PROJECTS\20081010_BARDELLA GROU

Date of Analysis : Dec 21,2009

PV Elite 2007, January 2007

Note: PVElite performs all calculations internally in Imperial Units to remain compliant with the ASME Code and any built in assumptions in the ASME Code formulas. The customary Imperial database is used for consistency. The finalized results are reflected to show the users set of selected units.

Refer to Code Case 2523 for more information.

Flange Input Data Values **Description: MW FLANGE :**

Manway Flange

Description of Flange Geometry (Type)		Integral Weld Neck	
Description of Flange Analysis		Partial, Thickness	
Design Pressure	P	26.17	kgf/cm²
Design Temperature		395	C
Internal Corrosion Allowance	ci	0.0000	mm
External Corrosion Allowance	ce	0.0000	mm
Use Corrosion Allowance in Thickness Calcs.		Yes	
Flange Inside Diameter	B	850.0001	mm
Flange Outside Diameter	A	1171.4500	mm
Flange Thickness	t	101.6000	mm
Thickness of Hub at Small End	go	32.0000	mm
Thickness of Hub at Large End	g1	57.6000	mm
Length of Hub	h	77.0000	mm
Flange Material		SA-182 F11	
Flange Allowable Stress At Temperature	Sfo	1388.03	kgf/cm²
Flange Allowable Stress At Ambient	Sfa	1406.14	kgf/cm²
Bolt Material		SA-193 B7	
Bolt Allowable Stress At Temperature	Sb	1757.68	kgf/cm²
Bolt Allowable Stress At Ambient	Sa	1757.68	kgf/cm²
Diameter of Bolt Circle	C	1089.1500	mm
Nominal Bolt Diameter	dB	41.2750	mm
Type of Threads		TEMA Thread Series	
Number of Bolts		32	
Flange Face Outside Diameter	Fod	1010.0000	mm
Flange Face Inside Diameter	Fid	850.0000	mm
Flange Facing Sketch		1, Code Sketch 1a	
Gasket Outside Diameter	Go	965.2000	mm
Gasket Inside Diameter	Gi	927.1000	mm
Gasket Factor	m	4.0000	
Gasket Design Seating Stress	y	703.07	kgf/cm²
Column for Gasket Seating		2, Code Column II	
Gasket Thickness	tg	4.0000	mm

ASME Code, Section VIII, Division 1, 2004, A-06

Hub Small End Required Thickness due to Internal Pressure:
= (P*(D/2+Ca))/(S*E-0.6*P) per UG-27 (c)(1)
= (26.17*(850.0001/2+0.0000))/(1388.03*1.00-0.6*26.17)+Ca
= 8.1047 mm

Corroded Flange ID,	Bcor = B+2*Fcor	850.000	mm
Corroded Large Hub,	g1Cor = g1-Fcor	57.600	mm
Corroded Small Hub,	g0Cor = go-Fcor	32.000	mm
Code R Dimension,	R = (C-B)/2 - g1	61.975	mm
Gasket Contact Width,	N = (Go - Gi) / 2	19.050	mm
Basic Gasket Width,	bo = N / 2	9.525	mm
Effective Gasket Width,	b = sqrt(bo) / 2	7.777	mm
Gasket Reaction Diameter,	G = Go - 2 * b	949.646	mm

Basic Flange and Bolt Loads:

Hydrostatic End Load due to Pressure [H]:
= 0.785 * G² * Peq

= 0.785 * 949.6457² * 26.170
= 185360.094 kgf

Contact Load on Gasket Surfaces [Hp]:
= 2 * b * Pi * G * m * P +
= 2 * 7.7771 * 3.1416 * 949.6457 * 4.0000 * 26.17
= 48576.250 kgf

Hydrostatic End Load at Flange ID [Hd]:
= Pi * Bcor² * P / 4
= 3.1416 * 850.0001² *26.1700 / 4
= 148501.531 kgf

Pressure Force on Flange Face [Ht]:
= H - Hd
= 185360 - 148501
= 36858.559 kgf

Operating Bolt Load [Wm1]:
= max(H + Hp + H'p, 0)
= max(185360 + 48576 + 0 , 0)
= 233936.328 kgf

Gasket Seating Bolt Load [Wm2]:
= y * b * Pi * G + yPart * bPart * lp
= 703.07*7.7771*3.141*949.646+0.00*0.0000*0.00
= 163128.109 kgf

Required Bolt Area [Am]:
= Maximum of Wm1/Sb, Wm2/Sa
= Maximum of 233936 / 1757 , 163128 / 1757
= 133.094 cm²

Bolting Information for TEMA Imperial Thread Series (Non Mandatory):

	Minimum	Actual	Maximum
Bolt Area, cm²	133.094	346.838	
Radial distance bet. hub and bolts	53.975	61.975	
Radial distance bet. bolts and the edge	41.275	41.150	
Circumferential spacing between bolts	88.900	106.755	218.017

Min. Gasket Contact Width (Brownell Young) [Not an ASME Calc] [Nmin]:
= Ab * Sa/(y * Pi * (Go + Gi))
= 346.838 * 1757.68 /(703.07 * 3.14 * (965.200 + 927.10))
= 14.586 mm

Note: Recommended Min. Width for Sheet and Composite Gaskets per table 2-4 :
= 25.400 mm[Note: Exceeds actual gasket width, 19.050]

Flange Design Bolt Load, Gasket Seating [W]:
= Sa * (Am + Ab) / 2
= 1757.68 * (133.0944 + 346.8380) / 2
= 421782.00 kgf

Gasket Seating Force [HG]:
= Wm1 - H
= 233936 - 185360
= 48576.25 kgf

Moment Arm Calculations:

Distance to Gasket Load Reaction [hg]:
= (C - G) / 2
= (1089.1500 - 949.6457) / 2
= 69.7521 mm

Distance to Face Pressure Reaction [ht]:
= (R + g1 + hg) / 2
= (61.9750 + 57.6000 + 69.7521) / 2
= 94.6636 mm

Distance to End Pressure Reaction [hd]:
= R + (g1 / 2)

```
 = 61.9750 + ( 57.6000 / 2.0 )
 = 90.7750 mm
```

Summary of Moments for Internal Pressure:

```
Loading                  Force   Distance Bolt Corr    Moment
End Pressure,   Md     148502.   90.7750    1.0000     13480. kgf-m.
Face Pressure,  Mt      36859.   94.6636    1.0000      3489. kgf-m.
Gasket Load,    Mg      48576.   69.7521    1.0000      3388. kgf-m.
Gasket Seating, Matm   421782.   69.7521    1.0000     29420. kgf-m.

Total Moment for Operation,      Mop                   20358. kgf-m.
Total Moment for Gasket seating, Matm                  29420. kgf-m.

Effective Hub Length, ho = sqrt(Bcor*goCor)          164.924  mm
Hub Ratio,          h/h0 = HL / H0                     0.467
Thickness Ratio,   g1/g0 = (g1Cor/goCor)               1.800
```

Flange Factors for Integral Flange:

```
Factor F per 2-7.2                                     0.839
Factor V per 2-7.3                                     0.262
Factor f per 2-7.6                                     1.072
Factors from Figure 2-7.1                    K =       1.378
                    T =      1.764           U =       6.830
                    Y =      6.215           Z =       3.224
                    d = .43946E+07 mm ³      e =       0.005 mm ^-1
Stress Factors                           ALPHA =       1.517
                 BETA =      1.689       GAMMA =       0.860
                DELTA =      0.239       Lamda =       1.099
```

Longitudinal Hub Stress, Operating [SHo]:

```
 = ( f * Mop / Bcor ) / ( L * g1² )
 = ( 1.0721 *20357 / 850.0001 ) / ( 1.0987 *57.6000² )
 = 704.42 kgf/cm²
```

Longitudinal Hub Stress, Seating [SHa]:

```
 = ( f * Matm / Bcor ) / ( L * g1² )
 = ( 1.0721 * 29420 / 850.0001 ) / ( 1.0987 * 57.6000² )
 = 1018.00 kgf/cm²
```

Radial Flange Stress, Operating [SRo]:

```
 = ( Beta * Mop / Bcor ) / ( L * t² )
 = ( 1.6891 *20357 / 850.0001 ) / ( 1.0987 *101.6000² )
 = 356.70 kgf/cm²
```

Radial Flange Stress, Seating [SRa]:

```
 = ( Beta * Matm/Bcor ) / ( L * t² )
 = ( 1.6891 *29420 /850.0001 ) / ( 1.0987 *101.6000² )
 = 515.49 kgf/cm²
```

Tangential Flange Stress, Operating [STo]:

```
 = ( Y * Mo / (t² * Bcor) ) - Z * SRo
 = ( 6.2149 *20357 / (101.6000² *850.0001 ) ) - 3.2238 *356
 = 292.05 kgf/cm²
```

Tangential Flange Stress, Seating [STa]:

```
 = ( y * Matm / (t² * Bcor) ) - Z * SRa
 = ( 6.2149 *29420 / (101.6000² *850.0001 ) ) - 3.2238 *515
 = 422.06 kgf/cm²
```

Average Flange Stress, Operating [SAo]:

```
 = ( SHo + max( SRo, STo ) ) / 2
 = ( 704 + max( 356 , 292 ))/ 2
 = 530.56 kgf/cm²
```

Average Flange Stress, Seating [SAa]:

```
 = ( SHa + max( SRa, STa ) ) / 2
 = ( 1018 + max( 515 , 422 ))/ 2
 = 766.75 kgf/cm²
```

Bolt Stress, Operating [BSo]:
= (Wm1 / Ab)
= (233936 / 346.8380)
= 674.48 kgf/cm²
Bolt Stress, Seating [BSa]:
= (Wm2 / Ab)
= (163128 / 346.8380)
= 470.33 kgf/cm²

Stress Computation Results:	Operating		Gasket Seating		
	Actual	Allowed	Actual	Allowed	
Longitudinal Hub	704.	2082.	1018.	2109.	kgf/cm²
Radial Flange	357.	1388.	515.	1406.	kgf/cm²
Tangential Flange	292.	1388.	422.	1406.	kgf/cm²
Maximum Average	531.	1388.	767.	1406.	kgf/cm²
Bolting	674.	1758.	470.	1758.	kgf/cm²

Minimum Required Flange Thickness	65.826	mm
Estimated M.A.W.P. (Operating)	68.2	kgf/cm²
Estimated M.A.W.P. (Gasket Seating)	104.9	kgf/cm²
Estimated Finished Weight of Flange at given Thk.	482.1	kgm
Estimated Unfinished Weight of Forging at given Thk	714.0	kgm

Flange Rigidity Based on Required Thickness [ASME]:

App. 2 Flange Rigidity Index for Seating Case	0.474
App. 2 Flange Rigidity Index for Operating Case	0.385

Flange Rigidity Based on Given Thickness [ASME]:

App. 2 Flange Rigidity Index for Seating Case	0.355
App. 2 Flange Rigidity Index for Operating Case	0.288

Minimum Design Metal Temperature Results:

Min Metal Temp. w/o impact per UCS-66	6	C
Min Metal Temp. at Rqd thickness (UCS 66.1)[rat 0.38]	-48	C

PV Elite 2007 ©1993-2007 by COADE Engineering Software

Flange Input Data Values **Description: MW COVER :**

Manway Cover

Description of Flange Geometry (Type)		Blind	
Description of Flange Analysis		Partial, Thickness	
Design Pressure	P	26.17	kgf/cm²
Design Temperature		395	C
Internal Corrosion Allowance	ci	0.0000	mm
External Corrosion Allowance	ce	0.0000	mm
Use Corrosion Allowance in Thickness Calcs.		Yes	
Flange Outside Diameter	A	1171.4500	mm
Flange Thickness	t	110.0000	mm
Flange Material		SA-182 F11	
Flange Allowable Stress At Temperature	Sfo	1388.03	kgf/cm²
Flange Allowable Stress At Ambient	Sfa	1406.14	kgf/cm²
Bolt Material		SA-193 B7	
Bolt Allowable Stress At Temperature	Sb	1757.68	kgf/cm²
Bolt Allowable Stress At Ambient	Sa	1757.68	kgf/cm²
Diameter of the Load Reaction, Long Span	D	0.0000	mm
Diameter of the Load Reaction, Short Span	d	0.0000	mm
Perimeter along the Center of the Bolts	L	3421.6655	mm
Diameter of Bolt Circle	C	1089.1500	mm
Nominal Bolt Diameter	dB	41.2750	mm
Type of Threads		TEMA Thread Series	
Number of Bolts		32	
Flange Face Outside Diameter	Fod	1010.0000	mm
Flange Face Inside Diameter	Fid	850.0000	mm
Flange Facing Sketch		1, Code Sketch 1a	
Gasket Outside Diameter	Go	965.2000	mm
Gasket Inside Diameter	Gi	927.1000	mm
Gasket Factor	m	4.0000	
Gasket Design Seating Stress	y	703.07	kgf/cm²
Column for Gasket Seating		2, Code Column II	
Gasket Thickness	tg	4.0000	mm

ASME Code, Section VIII, Division 1, 2004, A-06

Gasket Contact Width,	N = (Go - Gi) / 2	19.050	mm
Basic Gasket Width,	bo = N / 2	9.525	mm
Effective Gasket Width,	b = sqrt(bo) / 2	7.777	mm
Gasket Reaction Diameter,	G = Go - 2 * b	949.646	mm

Basic Flange and Bolt Loads:

Hydrostatic End Load due to Pressure [H]:
= 0.785 * G² * Peq
= 0.785 * 949.6457² * 26.170
= 185360.094 kgf
Contact Load on Gasket Surfaces [Hp]:
= 2 * b * Pi * G * m * P +
= 2 * 7.7771 * 3.1416 * 949.6457 * 4.0000 * 26.17
= 48576.250 kgf
Operating Bolt Load [Wm1]:
= max(H + Hp + H'p, 0)
= max(185360 + 48576 + 0 , 0)

= 233936.328 kgf
Gasket Seating Bolt Load [Wm2]:
= y * b * Pi * G + yPart * bPart * lp
= 703.07*7.7771*3.141*949.646+0.00*0.0000*0.00
= 163128.109 kgf
Required Bolt Area [Am]:
= Maximum of Wm1/Sb, Wm2/Sa
= Maximum of 233936 / 1757 , 163128 / 1757
= 133.094 cm²

Bolting Information for TEMA Imperial Thread Series (Non Mandatory):

	Minimum	Actual	Maximum
Bolt Area, cm²	133.094	346.838	
Radial distance bet. bolts and the edge	41.275	41.150	
Circumferential spacing between bolts	88.900	106.755	229.217

Min. Gasket Contact Width (Brownell Young) [Not an ASME Calc] [Nmin]:
= Ab * Sa/(y * Pi * (Go + Gi))
= 346.838 * 1757.68 /(703.07 * 3.14 * (965.200 + 927.10))
= 14.586 mm

Flange Design Bolt Load, Gasket Seating [W]:
= Sa * (Am + Ab) / 2
= 1757.68 * (133.0944 + 346.8380) / 2
= 421782.00 kgf
Gasket Seating Force [HG]:
= Wm1
= 233936.33 kgf

Moment Arm Calculations:
Distance to Gasket Load Reaction [hg]:
= (C - G) / 2
= (1089.1500 - 949.6457) / 2
= 69.7521 mm

Tangential Flange Stress, Flat Head, Operating [STo]:
= 1.9 * Wm1 * hG * Bcor/(t² * G) + C * Z * Peq * G²/t²
= 1.9 * 233936 * 69.7521 * 1.0000 /(110.0000² * 949.6457) +
0.30 * 1.0000 * 26.17 * 949.6457²)/110.0000²
= 854.96 kgf/cm²
Tangential Flange Stress, Flat Head, Seating [STa]:
= 1.9 * W * hG * Bcor /(t² * G)
= 1.9 * 421782 * 69.7521 * 1.000 /(110.0000² * 949.6457)
= 486.47 kgf/cm²

Bolt Stress, Operating [BSo]:
= (Wm1 / Ab)
= (233936 / 346.8380)
= 674.48 kgf/cm²
Bolt Stress, Seating [BSa]:
= (Wm2 / Ab)
= (163128 / 346.8380)
= 470.33 kgf/cm²

Stress Computation Results:	Operating		Gasket Seating		
	Actual	Allowed	Actual	Allowed	
Tangential Flange	855.	1388.	486.	1406.	kgf/cm²
Bolting	674.	1758.	470.	1758.	kgf/cm²

Reqd. Blind Flange Thickness at Center	86.331	mm
Reqd. Blind Flange Thickness at Gasket	64.700	mm

Estimated M.A.W.P. (Operating)	42.5	kgf/cm²
Estimated M.A.W.P. (Gasket Seating)	204.6	kgf/cm²
Estimated Finished Weight of Flange at given Thk.	928.7	kgm
Estimated Unfinished Weight of Forging at given Thk	928.7	kgm

Minimum Design Metal Temperature Results:

Min Metal Temp. w/o impact per UCS-66	-19	C
Min Metal Temp. at Rqd thickness (UCS 66.1)[rat 0.61]	-40	C

PV Elite 2007 ©1993-2007 by COADE Engineering Software

Element Thickness, Pressure, Diameter and Allowable Stress :

From	To	Int. Press + Liq. Hd kgf/cm²	Nominal Thickness mm	Total Corr Allowance mm	Element Diameter mm	Allowable Stress(SE) kgf/cm²
Skirt		0.00000	16.0000	0.00000	3129.00	0.00000
Skirt		0.00000	16.0000	0.00000	3129.00	0.00000
Bot Head		26.4433	35.5000	0.00000	3106.00	1504.57
Cylinder		26.3714	38.0000	0.00000	3107.00	1504.57
Top Head		26.1700	35.5000	0.00000	3106.00	1504.57
Manway Fla		26.1700	103.124	0.00000	850.000	1388.03
Manway Cov		26.1700	110.000	0.00000	1171.45	1388.03

Element Required Thickness and MAWP :

From	To	Design Pressure kgf/cm²	M.A.W.P. Corroded kgf/cm²	M.A.P. New & Cold kgf/cm²	Actual Thickness mm	Required Thickness mm
Skirt		0.00000	No Calc	No Calc	16.0000	No Calc
Skirt		0.00000	No Calc	No Calc	16.0000	No Calc
Bot Head		26.1700	32.5945	32.8678	34.0000	27.3425
Cylinder		26.1700	36.0694	36.2708	38.0000	27.5185
Top Head		26.1700	32.8678	32.8678	34.0000	27.0594
Manway Fla		26.1700	68.1978	68.1978	101.600	65.8257
Manway Cov		26.1700	42.4872	43.0416	110.000	86.3307
Minimum			32.595	32.868		

MAWP: 32.595 kgf/cm², limited by: Bot Head.

Internal Pressure Calculation Results :

ASME Code, Section VIII, Division 1, 2004 A-06

Elliptical Head From 30 To 40 SA-387 11 at 395 C

Bot Head

Thickness Due to Internal Pressure [Tr]:
= (P*(D+2*CA)*K)/(2*S*E-0.2*P) Appendix 1-4(c)
= (26.443*(3106.0000+2*0.0000)*1.00)/(2*1504.57*1.00-0.2*26.443)
= 27.3425 + 0.0000 = 27.3425 mm

Max. All. Working Pressure at Given Thickness [MAWP]:
Less Operating Hydrostatic Head Pressure of 0.273 kgf/cm²
= (2*S*E*(T-Ca))/(K*(D+2*Ca)+0.2*(T-Ca)) per Appendix 1-4 (c)
= (2*1504.57*1.00*(34.0000))/(1.00*(3106.0000+2*0.0000)+0.2*(34.0000))
= 32.868 - 0.273 = 32.595 kgf/cm²

Maximum Allowable Pressure, New and Cold [MAPNC]:
= (2*Sa*E*T)/(K*D+0.2*T) per Appendix 1-4 (c)
= (2*1504.57*1.00*34.0000)/(1.00*3106.0000+0.2*34.0000)
= 32.868 kgf/cm²

Actual stress at given pressure and thickness [Sact]:
= (P*(K*(D+2*CA)+0.2*(T-CA)))/(2*E*(T-CA))
= (26.443*(1.00*(3106.0000+2*0.0000)+0.2*(34.0000)))/(2*1.00*(34.0000))
= 1210.479 kgf/cm²

Required Thickness of Straight Flange = 27.585 mm

Percent Elongation per UCS-79 (75*tnom/Rf)*(1-Rf/Ro) 4.985 %

Note: This Material was specified as being Impact Tested!

Note: Post Weld Heat Treatment is required for this Element.

Cylindrical Shell From 40 To 50 SA-387 11 at 395 C

Cylinder

Thickness Due to Internal Pressure [Tr]:
= (P*(D/2+Ca))/(S*E-0.6*P) per UG-27 (c)(1)
= (26.371*(3107.0000/2+0.0000))/(1504.57*1.00-0.6*26.371)
= 27.5185 + 0.0000 = 27.5185 mm

Max. All. Working Pressure at Given Thickness [MAWP]:
Less Operating Hydrostatic Head Pressure of 0.201 kgf/cm²
= (S*E*(T-Ca))/((D/2+Ca)+0.6*(T-Ca)) per UG-27 (c)(1)
= (1504.57*1.00*(38.0000))/((3107.0000/2+0.0000)+0.6*38.0000)
= 36.271 - 0.201 = 36.069 kgf/cm²

Maximum Allowable Pressure, New and Cold [MAPNC]:
= (SA*E*T)/(D/2+0.6*T) per UG-27 (c)(1)
= (1504.57*1.00*38.0000)/(3107.0000/2+0.6*38.0000)
= 36.271 kgf/cm²

Actual stress at given pressure and thickness [Sact]:
= (P*((D/2+CA)+0.6*(T-CA)))/(E*(T-CA))
= (26.371*((3107.0000/2+0.0000)+0.6*(38.0000)))/(1.00*(38.0000))
= 1093.929 kgf/cm²

Percent Elongation per UCS-79 (50*tnom/Rf)*(1-Rf/Ro) 1.208 %

Note: This Material was specified as being Impact Tested!

Note: Post Weld Heat Treatment is required for this Element.

Elliptical Head From 50 To 60 SA-387 11 at 395 C

Top Head

Thickness Due to Internal Pressure [Tr]:
= (P*(D+2*CA)*K)/(2*S*E-0.2*P) Appendix 1-4(c)
= (26.170*(3106.0000+2*0.0000)*1.00)/(2*1504.57*1.00-0.2*26.170)
= 27.0594 + 0.0000 = 27.0594 mm

Max. All. Working Pressure at Given Thickness [MAWP]:
= (2*S*E*(T-Ca))/(K*(D+2*Ca)+0.2*(T-Ca)) per Appendix 1-4 (c)
= (2*1504.57*1.00*(34.0000))/(1.00*(3106.0000+2*0.0000)+0.2*(34.0000))
= 32.868 kgf/cm²

Maximum Allowable Pressure, New and Cold [MAPNC]:
= (2*Sa*E*T)/(K*D+0.2*T) per Appendix 1-4 (c)
= (2*1504.57*1.00*34.0000)/(1.00*3106.0000+0.2*34.0000)
= 32.868 kgf/cm²

Actual stress at given pressure and thickness [Sact]:
= (P*(K*(D+2*CA)+0.2*(T-CA)))/(2*E*(T-CA))
= (26.170*(1.00*(3106.0000+2*0.0000)+0.2*(34.0000)))/(2*1.00*(34.0000))
= 1197.970 kgf/cm²

Required Thickness of Straight Flange = 27.297 mm

Percent Elongation per UCS-79 (75*tnom/Rf)*(1-Rf/Ro) 4.985 %

Note: This Material was specified as being Impact Tested!

Note: Post Weld Heat Treatment is required for this Element.

MINIMUM METAL DESIGN TEMPERATURE RESULTS :

Minimum Metal Temp. w/o impact per UCS-66	-48.	C
Minimum Metal Temp. at Required thickness	-48.	C
Minimum Design Metal Temperature (Entered by User)	-18.	C

Hydrostatic Test Pressure Results:

Pressure per UG99b	= 1.3 * M.A.W.P. * Sa/S	42.373	kgf/cm²
Pressure per UG99b[33]	= 1.3 * Design Pres * Sa/S	34.021	kgf/cm²
Pressure per UG99c	= 1.3 * M.A.P. - Head(Hyd)	41.957	kgf/cm²
Pressure per UG100	= 1.1 * M.A.W.P. * Sa/S	35.854	kgf/cm²

Vertical Hydrotest performed in accordance with: UG-99b

Stresses on Elements due to Hydrostatic Test Pressure:

From To	Stress	Allowable	Ratio	Pressure
Bot Head	1975.0	2847.4	0.694	43.14
Cylinder	1786.3	2847.4	0.627	43.06
Top Head	1943.4	2847.4	0.683	42.45

Elements Suitable for Internal Pressure.

PV Elite 2007 ©1993-2007 by COADE Engineering Software

Element and Detail Weights

From	To	Element Metal Wgt. kgm	Element ID Volume cm^3	Corroded Metal Wgt. kgm	Corroded ID Volume cm^3	Extra due Misc % kgm
10	20	7623.36	0.00000	7623.36	0.00000	1623.78
20	30	1225.22	0.00000	1225.22	0.00000	260.971
30	40	3358.48	4.225E+06	3358.48	4.225E+06	715.357
40	50	20078.2	52.31E+06	20078.2	52.31E+06	4276.67
50	60	3358.48	4.225E+06	3358.48	4.225E+06	715.357
60	70	488.227	58517.7	488.227	58517.7	103.992
70	80	928.711	0.00000	928.711	0.00000	197.816
Total		37060	60823746	37060	60823746	7893

Weight of Details

From	Type	Weight of Detail kgm	X Offset, Dtl. Cent. cm	Y Offset, Dtl. Cent. cm	Description
10	Insl	119.913	0.00000	484.188	INS: 10
10	Wght	6800.00	0.00000	300.000	FIRE PROOF
20	Insl	379.182	0.00000	50.0000	INS
30	Liqd	3704.56	0.00000	-38.8250	CAT
30	Insl	491.818	0.00000	-36.8250	INS: 20
30	Lini	345.958	0.00000	-36.8250	CLAD
30	Nozl	99.4867	0.00000	6.47083	Noz 2
30	Nozl	193.988	0.00000	6.47083	Noz 11 A/B
40	Liqd	15203.3	0.00000	114.500	CAT
40	Insl	2633.66	0.00000	345.000	INS: 30
40	Lini	1848.18	0.00000	345.000	CLAD
40	Nozl	62.3962	162.650	26.0000	Noz 8A/B
40	Nozl	90.3780	162.650	368.000	Noz 9
40	Nozl	789.658	178.850	347.500	Noz 13
40	Nozl	137.656	165.050	444.000	Noz 12 A/B
40	Wght	21000.0	0.00000	537.500	TOP CAT BED
50	Insl	491.818	0.00000	40.8250	INS: 40
50	Lini	345.958	0.00000	40.8250	CLAD
50	Nozl	1171.44	0.00000	6.47083	Noz10
70	Nozl	181.800	0.00000	0.00000	Noz 1

Total Weight of Each Detail Type

Total Weight of Liquid	18907.8
Total Weight of Insulation	4116.4
Total Weight of Lining	2540.1
Total Weight of Nozzles	2726.8
Total Weight of Weights	27800.0
Sum of the Detail Weights	56091.1 kgm

Fabricated Wt. - Bare Weight W/O Removable Internals	47681.5 kgm
Shop Test Wt. - Fabricated Weight + Water (Full)	115277.9 kgm
Shipping Wt. - Fab. Wt + Rem. Intls.+ Shipping App.	54338.0 kgm
Erected Wt. - Fab. Wt + Rem. Intls.+ Insul. (etc)	61138.0 kgm
Empty Wt. - Fab. Wt + Intls. + Details + Wghts.	61138.0 kgm
Operating Wt. - Empty Wt. + Operating Liquid (No CA)	101045.8 kgm
Field Test Wt. - Empty Weight + Water (Full)	121934.4 kgm
Mass of the Upper 1/3 of the Vertical Vessel	47306.2 kgm

Outside Surface Areas of Elements

From	To	Surface Area

		cm²
10	20	496529.
20	30	99305.8
30	40	113403.
40	50	689979.
50	60	113403.
60	70	11233.5
70	80	14826.2
Total		1538678.125 cm²

Element and Detail Weights

From	To	Total Ele. Empty Wgt. kgm	Total. Ele. Oper. Wgt. kgm	Total. Ele. Hydro. Wgt. kgm	Total Dtl. Offset Mom. kgf-m.	Oper. Wgt. No Liquid kgm
10	20	16167.1	16167.1	16167.1	0.00000	16167.1
20	30	1865.37	1865.37	1865.37	0.00000	1865.37
30	40	5205.09	8909.65	9428.59	0.00000	5205.09
40	50	29916.8	66120.1	82207.8	1887.99	29916.8
50	60	6083.06	6083.06	10306.6	0.00000	6083.06
60	70	592.219	592.219	650.711	0.00000	592.219
70	80	1308.33	1308.33	1308.33	0.00000	1308.33

Cumulative Vessel Weight

From	To	Cumulative Empty Wgt. kgm	Cumulative Oper. Wgt. kgm	Cumulative Hydro. Wgt. kgm
10	20	61138.0	101046.	121934.
20	30	44970.9	84878.7	105767.
30	40	43105.5	83013.3	103902.
40	50	37900.4	74103.7	94473.4
50	60	7983.61	7983.61	12265.6
60	70	1900.55	1900.55	1959.04
70	80	1308.33	1308.33	1308.33

Note: The cumulative empty weights in the column above are the cumulative operating weights minus the operating liquid weight minus any weights absent in the empty condition.

Cumulative Vessel Moment

From	To	Cumulative Empty Mom. kgf-m.	Cumulative Oper. Mom. kgf-m.	Cumulative Hydro. Mom. kgf-m.
10	20	1887.99	1887.99	1887.99
20	30	1887.99	1887.99	1887.99
30	40	1887.99	1887.99	1887.99
40	50	1887.99	1887.99	1887.99
50	60	0.00000	0.00000	0.00000
60	70	0.00000	0.00000	0.00000
70	80	0.00000	0.00000	0.00000

PV Elite 2007 ©1993-2007 by COADE Engineering Software

Nozzle Flange MAWP Results :

ANSI Flange Pressure Rating for: Noz 2 : Class 300 : Grade GR 1.9

```
Pressure Rating for B16.5 Flange at :     395 C   is : 37.660  kgf/cm²
Pressure Rating for B16.5 Flange at :      21 C   is : 52.730  kgf/cm²
```

ANSI Flange Pressure Rating for: Noz10 : Class 300 : Grade GR 1.9

```
Pressure Rating for B16.5 Flange at :     395 C   is : 37.660  kgf/cm²
Pressure Rating for B16.5 Flange at :      21 C   is : 52.730  kgf/cm²
```

Note: ANSI Ratings are per ANSI/ASME B16.5 2003 Edition

Note: Large Diameter Flange ratings per ANSI B16.47 1996 edition.

```
Lowest Flange Pressure Rating was (ope) :    37.660  kgf/cm²
Lowest Flange Pressure Rating was (Amb) :    52.730  kgf/cm²
```

PV Elite 2007 ©1993-2007 by COADE Engineering Software

The Natural Frequencies for the vessel have been computed iteratively by solving a system of matrices. These matrices describe the mass and the stiffness of the vessel. This is the generalized eigenvalue/ eigenvector problem and is referenced in some mathematical texts.

The Natural Frequency for the Vessel (Empty.) is 6.73020 Hz.

The Natural Frequency for the Vessel (Ope...) is 5.02566 Hz.

The Natural Frequency for the Vessel (Filled) is 4.79318 Hz.

PV Elite 2007 ©1993-2007 by COADE Engineering Software

Wind Calculations per the Brazilian Code NBR 6123 and Petrobras BPE-500-P4-19i

Wind Input Data:

Basic Wind Velocity	Vo	144.0 km/hr
Ground Roughness Category		III
Equipment Dimension Class		A
Topographical Factor	S1	1.00
Statistical Factor	S3	1.00
Height of Vessel Base from Grade		0.00 cm
Fundamental Period of Vibration		0.20 s
Vessel Surface Condition		Rough

Wind Output Data and Sample Calculation for the first Element:

Shape Coefficient from Table or user defined [Ca]:
= 0.767

Note: T < 1.0 seconds use the Static Analysis Wind Load Method.

Wind Height under evaluation [z]:
= 250.000 cm

Determine the Rugosity Factor based on the Elevation, category and class [S2]:
= 0.880

Determine the characteristic Wind Velocity [Vk]:
= Vo * S1 * S2 * S3
= 144.00 * 1.00 * 0.88 * 1.000
= 126.720 km/hr
= 35.201 m/s

The Wind Pressure at Elevation z [q]:
= Wind Density/2 * Vk^2
= 0.16300 * 35.201^2
= 77.518 kgf/m^2

Force generated on this Element [Fa]:
= Ca * q * Area
= 0.77 * 760.19 * 19.091
= 1134.742 kgf

Wind Vibration Calculations

This evaluation is based on work by Kanti Mahajan and Ed Zorilla

Nomenclature

Cf - Correction factor for natural frequency
D - Average internal diameter of vessel cm
Df - Damping Factor < 0.75 Unstable, > 0.95 Stable
Dr - Average internal diameter of top half of vessel cm
f - Natural frequency of vibration (Hertz)
f1 - Natural frequency of bare vessel based on a unit value of $(D/L^2)(10^4)$
L - Total height of structure cm
Lc - Total length of conical section(s) of vessel cm
tb - Uncorroded plate thickness at bottom of vessel mm
V30 - Design Wind Speed provided by user km/hr
Vc - Critical wind velocity km/hr
Vw - Maximum wind speed at top of structure km/hr
W - Total corroded weight of structure kgf
Ws - Cor. vessel weight excl. weight of parts which do not effect stiff. kgf
Z - Maximum amplitude of vibration at top of vessel mm

```
Dl  - Logarithmic decrement ( taken as 0.03 for Welded Structures )
Vp  - Vib. Chance, <= 0.320E-03 (High); 0.320E-03 < 0.400E-03 (Probable)
P30 - wind pressure 30 feet above the base
```

Check other Conditions and Basic Assumptions:

```
#1 - Total Cone Length / Total Length < 0.5
     0.000 / 1326.860 = 0.000

#2 - ( D / L² ) * 10^4 < 8.0 (English Units)
   - ( 10.94 / 43.53² ) * 10^4 = 57.752 [Geometry Violation]
```

Compute the vib possibility. If Vp > 0.400E-03 no chance.

```
Vp = W / ( L * Dr²)
Vp = 101045 / ( 1326.86 * 301.414² ) = 0.838E-03
```

Since Vp is > 0.400E-03 no further vibration analysis is required !

Wind Loads on Masses/Equipment/Piping

ID	Wind Area cm²	Elevation cm	Pressure kgf/m²	Force kgf
FIRE PROOF	0.00	300.00	77.69	0.00
TOP CAT BED	0.00	1141.50	90.44	0.00

The Natural Frequency for the Vessel (Ope...) is 5.02566 Hz.

Wind Load Calculation

From	To	Wind Height cm	Wind Diameter cm	Wind Area cm²	Height Factor kgf/m²	Element Wind Load kgf
10	20	250.000	381.825	190912.	77.5177	1134.74
20	30	550.000	418.920	41892.0	78.5783	252.404
30	40	602.000	420.480	1681.92	79.6891	10.2770
40	50	949.000	421.560	290876.	87.3007	1947.10
50	60	1296.00	420.480	1681.92	92.9611	11.9886
60	70	1306.93	126.384	2257.22	93.1299	16.1185
70	80	1321.36	166.974	1836.71	93.3529	13.1472

PV Elite 2007 ©1993-2007 by COADE Engineering Software

The following table is for the Operating Case.

Wind/Earthquake Shear, Bending

From	To	Distance to Support cm	Cummulative Wind Shear kgf	Earthquake Shear kgf	Wind Bending kgf-m.	Earthquake Bending kgf-m.
10	20	250.000	3385.78	0.00000	23304.7	0.00000
20	30	550.000	2251.04	0.00000	9212.66	0.00000
30	40	602.000	1998.63	0.00000	7087.82	0.00000
40	50	949.000	1988.36	0.00000	7008.08	0.00000
50	60	1296.00	41.2543	0.00000	5.92094	0.00000
60	70	1306.93	29.2657	0.00000	4.51055	0.00000
70	80	1321.36	13.1472	0.00000	0.72310	0.00000

PV Elite 2007 ©1993-2007 by COADE Engineering Software

Wind Deflection Calculations:

The following table is for the Operating Case.

Wind Deflection

From	To	Cumulative Wind Shear kgf	Centroid Deflection mm	Elem. End Deflection mm	Elem. Ang. Rotation
10	20	3385.78	0.016219	0.057111	0.00002
20	30	2251.04	0.067331	0.078064	0.00002
30	40	1998.63	0.078503	0.078942	0.00002
40	50	1988.36	0.15788	0.23949	0.00002
50	60	41.2543	0.23996	0.24044	0.00002
60	70	29.2657	0.24255	0.24467	0.00002
70	80	13.1472	0.24598	0.24728	0.00002

Critical Wind Velocity for Tower Vibration

From	To	1st Crit. Wind Speed km/hr	2nd Crit. Wind Speed km/hr
10	20	344.475	2152.97
20	30	377.942	2362.14
30	40	379.349	2370.93
40	50	380.324	2377.02
50	60	379.349	2370.93
60	70	114.021	712.634
70	80	150.641	941.506

Allowable deflection at the Tower Top (Ope)(6.000"/100ft. Criteria)
Allowable deflection : 66.343 Actual Deflection : 0.247 mm

PV Elite 2007 ©1993-2007 by COADE Engineering Software

Longitudinal Stress Constants

From	To	Metal Area New & Cold cm^2	Metal Area Corroded cm^2	New & Cold Sect. Mod. mm^3	Corroded Sect. Mod. mm^3
10	20	1580.85	1580.85	123.7E+06	123.7E+06
20	30	1580.85	1580.85	123.7E+06	123.7E+06
30	40	3353.96	3353.96	260.5E+06	260.5E+06
40	50	3754.52	3754.52	291.7E+06	291.7E+06
50	60	3353.96	3353.96	260.5E+06	260.5E+06
60	70	3353.96	3353.96	260.5E+06	260.5E+06
70	80	4428.37	4428.37	131.6E+06	131.6E+06

PV Elite 2007 ©1993-2007 by COADE Engineering Software

Longitudinal Allowable Stresses

From	To	All. Str. Long. Ten. kgf/cm²	All. Str. Hydr. Ten. kgf/cm²	All. Str. Long. Com. kgf/cm²	All. Str. Hyr. Comp. kgf/cm²
10	20	1287.96	2404.50	-679.894	-1410.35
20	30	1805.48	2847.43	-679.894	-1700.47
30	40	1805.48	2847.43	-794.573	-1770.59
40	50	1805.48	2847.43	-810.753	-1780.73
50	60	1805.48	2847.43	-794.573	-1770.59
60	70	1665.63	2531.05	-794.573	-1679.73
70	80	1665.63	2531.05	-1076.62	-1877.20

PV Elite 2007 ©1993-2007 by COADE Engineering Software

Longitudinal Stress Report

Note: Longitudinal Operating and Empty Stresses are computed in the corroded condition. Stresses due to loads in the hydrostatic test cases have been computed in the new and cold condition.

Longitudinal Stresses Due to . . .

From	To	Long. Str. Int. Pres. kgf/cm²	Long. Str. Ext. Pres. kgf/cm²	Long. Str. Hyd. Pres. kgf/cm²
10	20	0.00000	0.00000	0.00000
20	30	0.00000	0.00000	0.00000
30	40	592.443	0.00000	959.247
40	50	529.701	0.00000	857.660
50	60	592.443	0.00000	959.247
60	70	0.00000	0.00000	0.00000
70	80	0.00000	0.00000	0.00000

Longitudinal Stresses Due to . . .

From	To	Wght. Str. Empty kgf/cm²	Wght. Str. Operating kgf/cm²	Wght. Str. Hydrotest kgf/cm²	Wght. Str. Emp. Mom. kgf/cm²	Wght. Str. Opr. Mom. kgf/cm²
10	20	-38.6742	-63.9188	77.1324	1.52666	1.52666
20	30	-28.4474	-53.6919	66.9055	1.52666	1.52666
30	40	-12.8521	-19.1134	12.8521	0.72477	0.72477
40	50	-10.0946	-15.6879	10.0946	0.64720	0.64720
50	60	-2.38036	-2.38036	2.38036	0.00000	0.00000
60	70	-0.56666	-0.56666	0.56666	0.00000	0.00000
70	80	-0.29544	-0.29544	0.29544	0.00000	0.00000

Longitudinal Stresses Due to . . .

From	To	Wght. Str. Hyd. Mom. kgf/cm²	Bend. Str. Oper. Wind kgf/cm²	Bend. Str. Oper. Equ. kgf/cm²	Bend. Str. Hyd. Wind kgf/cm²	Bend. Str. Hyd. Equ. kgf/cm²
10	20	1.52666	18.8445	0.00000	18.8445	0.00000
20	30	1.52666	7.44949	0.00000	7.44949	0.00000
30	40	0.72477	2.72090	0.00000	2.72090	0.00000
40	50	0.64720	2.40235	0.00000	2.40235	0.00000
50	60	0.00000	0.0022729	0.00000	0.0022729	0.00000
60	70	0.00000	0.0017315	0.00000	0.0017315	0.00000
70	80	0.00000	0.00054940	0.00000	0.00054940	0.00000

Longitudinal Stresses Due to . . .

From	To	Long. Str. Vortex Ope. kgf/cm²	Long. Str. Vortex Emp. kgf/cm²	Long. Str. Vortex Tst. kgf/cm²	EarthQuake Empty kgf/cm²
10	20	0.00000	0.00000	0.00000	0.00000
20	30	0.00000	0.00000	0.00000	0.00000
30	40	0.00000	0.00000	0.00000	0.00000
40	50	0.00000	0.00000	0.00000	0.00000
50	60	0.00000	0.00000	0.00000	0.00000
60	70	0.00000	0.00000	0.00000	0.00000
70	80	0.00000	0.00000	0.00000	0.00000

Longitudinal Stresses Due to . . .

From	To	Long. Str. Y Forces W kgf/cm²	Long. Str. Y ForceS S kgf/cm²
10	20	0.00000	0.00000

20	30	0.00000	0.00000
30	40	0.00000	0.00000
40	50	0.00000	0.00000
50	60	0.00000	0.00000
60	70	0.00000	0.00000
70	80	0.00000	0.00000

Long. Stresses due to User Forces and Moments

From	To	Wind For/Mom Corroded kgf/cm²	Eqk For/Mom Corroded kgf/cm²	Wnd For/Mom No Corr. kgf/cm²	Eqk For/Mom No Corr. kgf/cm²
10	20	0.00000	0.00000	0.00000	0.00000
20	30	0.00000	0.00000	0.00000	0.00000
30	40	0.00000	0.00000	0.00000	0.00000
40	50	0.00000	0.00000	0.00000	0.00000
50	60	0.00000	0.00000	0.00000	0.00000
60	70	0.00000	0.00000	0.00000	0.00000
70	80	0.00000	0.00000	0.00000	0.00000

PV Elite 2007 ©1993-2007 by COADE Engineering Software

Stress Combination Load Cases for Vertical Vessels:

Load Case Definition Key

IP = Longitudinal Stress due to Internal Pressure
EP = Longitudinal Stress due to External Pressure
HP = Longitudinal Stress due to Hydrotest Pressure
NP = No Pressure
EW = Longitudinal Stress due to Weight (Empty)
OW = Longitudinal Stress due to Weight (Operating)
HW = Longitudinal Stress due to Weight (Hydrotest)
WI = Bending Stress due to Wind Moment (Operating)
EQ = Bending Stress due to Earthquake Moment (Operating)
EE = Bending Stress due to Earthquake Moment (Empty)
HI = Bending Stress due to Wind Moment (Hydrotest)
HE = Bending Stress due to Earthquake Moment (Hydrotest)
WE = Bending Stress due to Wind Moment (Empty) (no CA)
WF = Bending Stress due to Wind Moment (Filled) (no CA)
CW = Longitudinal Stress due to Weight (Empty) (no CA)
VO = Bending Stress due to Vortex Shedding Loads (Ope)
VE = Bending Stress due to Vortex Shedding Loads (Emp)
VF = Bending Stress due to Vortex Shedding Loads (Test No CA.)
FW = Axial Stress due to Vertical Forces for the Wind Case
FS = Axial Stress due to Vertical Forces for the Seismic Case
BW = Bending Stress due to Lat. Forces for the Wind Case, Corroded
BS = Bending Stress due to Lat. Forces for the Seismic Case, Corroded
BN = Bending Stress due to Lat. Forces for the Wind Case, UnCorroded
BU = Bending Stress due to Lat. Forces for the Seismic Case, UnCorroded

General Notes:

Case types HI and HE are in the Un-Corroded condition.

Case types WE, WF, and CW are in the Un-Corroded condition.

A blank stress and stress ratio indicates that the corresponding stress comprising those components that did not contribute to that type of stress.

An asterisk (*) in the final column denotes overstress.

Analysis of Load Case 1 : NP+EW+WI+FW+BW

From Node	Tensile Stress	All. Tens. Stress	Comp. Stress	All. Comp. Stress	Tens. Ratio	Comp. Ratio
10		1287.96	-59.05	-679.89		0.0868
20		1805.48	-37.42	-679.89		0.0550
30		1805.48	-16.30	-794.57		0.0205
40		1805.48	-13.14	-810.75		0.0162
50		1805.48	-2.38	-794.57		0.0030

Analysis of Load Case 2 : NP+EW+EE+FS+BS

From Node	Tensile Stress	All. Tens. Stress	Comp. Stress	All. Comp. Stress	Tens. Ratio	Comp. Ratio
10		1287.96	-40.20	-679.89		0.0591
20		1805.48	-29.97	-679.89		0.0441
30		1805.48	-13.58	-794.57		0.0171
40		1805.48	-10.74	-810.75		0.0132
50		1805.48	-2.38	-794.57		0.0030

Analysis of Load Case 3 : NP+OW+WI+FW+BW

From Node	Tensile Stress	All. Tens. Stress	Comp. Stress	All. Comp. Stress	Tens. Ratio	Comp. Ratio
10		1287.96	-84.29	-679.89		0.1240

20		1805.48	-62.67	-679.89	0.0922
30		1805.48	-22.56	-794.57	0.0284
40		1805.48	-18.74	-810.75	0.0231
50		1805.48	-2.38	-794.57	0.0030

Analysis of Load Case 4 : NP+OW+EQ+FS+BS

From Node	Tensile Stress	All. Tens. Stress	Comp. Stress	All. Comp. Stress	Tens. Ratio	Comp. Ratio
10		1287.96	-65.45	-679.89		0.0963
20		1805.48	-55.22	-679.89		0.0812
30		1805.48	-19.84	-794.57		0.0250
40		1805.48	-16.34	-810.75		0.0201
50		1805.48	-2.38	-794.57		0.0030

Analysis of Load Case 5 : NP+HW+HI

From Node	Tensile Stress	All. Tens. Stress	Comp. Stress	All. Comp. Stress	Tens. Ratio	Comp. Ratio
10		1287.96	-97.50	-679.89		0.1434
20		1805.48	-75.88	-679.89		0.1116
30		1805.48	-16.30	-794.57		0.0205
40		1805.48	-13.14	-810.75		0.0162
50		1805.48	-2.38	-794.57		0.0030

Analysis of Load Case 6 : NP+HW+HE

From Node	Tensile Stress	All. Tens. Stress	Comp. Stress	All. Comp. Stress	Tens. Ratio	Comp. Ratio
10		1287.96	-78.66	-679.89		0.1157
20		1805.48	-68.43	-679.89		0.1007
30		1805.48	-13.58	-794.57		0.0171
40		1805.48	-10.74	-810.75		0.0132
50		1805.48	-2.38	-794.57		0.0030

Analysis of Load Case 7 : IP+OW+WI+FW+BW

From Node	Tensile Stress	All. Tens. Stress	Comp. Stress	All. Comp. Stress	Tens. Ratio	Comp. Ratio
10		1287.96	-84.29	-679.89		0.1240
20		1805.48	-62.67	-679.89		0.0922
30	576.77	1805.48		-794.57	0.3195	
40	517.06	1805.48		-810.75	0.2864	
50	590.06	1805.48		-794.57	0.3268	

Analysis of Load Case 8 : IP+OW+EQ+FS+BS

From Node	Tensile Stress	All. Tens. Stress	Comp. Stress	All. Comp. Stress	Tens. Ratio	Comp. Ratio
10		1287.96	-65.45	-679.89		0.0963
20		1805.48	-55.22	-679.89		0.0812
30	574.05	1805.48		-794.57	0.3180	
40	514.66	1805.48		-810.75	0.2851	
50	590.06	1805.48		-794.57	0.3268	

Analysis of Load Case 9 : EP+OW+WI+FW+BW

From Node	Tensile Stress	All. Tens. Stress	Comp. Stress	All. Comp. Stress	Tens. Ratio	Comp. Ratio
10		1287.96	-84.29	-679.89		0.1240
20		1805.48	-62.67	-679.89		0.0922
30		1805.48	-22.56	-794.57		0.0284
40		1805.48	-18.74	-810.75		0.0231
50		1805.48	-2.38	-794.57		0.0030

Analysis of Load Case 10 : EP+OW+EQ+FS+BS

From Node	Tensile Stress	All. Tens. Stress	Comp. Stress	All. Comp. Stress	Tens. Ratio	Comp. Ratio
10		1287.96	-65.45	-679.89		0.0963
20		1805.48	-55.22	-679.89		0.0812
30		1805.48	-19.84	-794.57		0.0250

40		1805.48	-16.34	-810.75		0.0201
50		1805.48	-2.38	-794.57		0.0030

Analysis of Load Case 11 : HP+HW+HI

From Node	Tensile Stress	All. Tens. Stress	Comp. Stress	All. Comp. Stress	Tens. Ratio	Comp. Ratio
10		2404.50	-97.50	-1410.35		0.0691
20		2847.43	-75.88	-1700.47		0.0446
30	949.84	2847.43		-1770.59	0.3336	
40	850.61	2847.43		-1780.73	0.2987	
50	956.87	2847.43		-1770.59	0.3360	

Analysis of Load Case 12 : HP+HW+HE

From Node	Tensile Stress	All. Tens. Stress	Comp. Stress	All. Comp. Stress	Tens. Ratio	Comp. Ratio
10		2404.50	-78.66	-1410.35		0.0558
20		2847.43	-68.43	-1700.47		0.0402
30	947.12	2847.43		-1770.59	0.3326	
40	848.21	2847.43		-1780.73	0.2979	
50	956.87	2847.43		-1770.59	0.3360	

Analysis of Load Case 13 : IP+WE+EW

From Node	Tensile Stress	All. Tens. Stress	Comp. Stress	All. Comp. Stress	Tens. Ratio	Comp. Ratio
10		1287.96	-40.20	-679.89		0.0591
20		1805.48	-29.97	-679.89		0.0441
30	580.32	1805.48		-794.57	0.3214	
40	520.25	1805.48		-810.75	0.2882	
50	590.06	1805.48		-794.57	0.3268	

Analysis of Load Case 14 : IP+WF+CW

From Node	Tensile Stress	All. Tens. Stress	Comp. Stress	All. Comp. Stress	Tens. Ratio	Comp. Ratio
10		1287.96	-63.92	-679.89		0.0940
20		1805.48	-53.69	-679.89		0.0790
30	573.33	1805.48		-794.57	0.3175	
40	514.01	1805.48		-810.75	0.2847	
50	590.06	1805.48		-794.57	0.3268	

Analysis of Load Case 15 : IP+VO+OW

From Node	Tensile Stress	All. Tens. Stress	Comp. Stress	All. Comp. Stress	Tens. Ratio	Comp. Ratio
10		1287.96	-65.45	-679.89		0.0963
20		1805.48	-55.22	-679.89		0.0812
30	574.05	1805.48		-794.57	0.3180	
40	514.66	1805.48		-810.75	0.2851	
50	590.06	1805.48		-794.57	0.3268	

Analysis of Load Case 16 : IP+VE+OW

From Node	Tensile Stress	All. Tens. Stress	Comp. Stress	All. Comp. Stress	Tens. Ratio	Comp. Ratio
10		1287.96	-65.45	-679.89		0.0963
20		1805.48	-55.22	-679.89		0.0812
30	574.05	1805.48		-794.57	0.3180	
40	514.66	1805.48		-810.75	0.2851	
50	590.06	1805.48		-794.57	0.3268	

Analysis of Load Case 17 : IP+VF+CW

From Node	Tensile Stress	All. Tens. Stress	Comp. Stress	All. Comp. Stress	Tens. Ratio	Comp. Ratio
10		2404.50	-63.92	-1410.35		0.0453
20		2847.43	-53.69	-1700.47		0.0316
30	573.33	2847.43		-1770.59	0.2013	
40	514.01	2847.43		-1780.73	0.1805	
50	590.06	2847.43		-1770.59	0.2072	

Analysis of Load Case 18 : FS+BS+IP+OW

From Node	Tensile Stress	All. Tens. Stress	Comp. Stress	All. Comp. Stress	Tens. Ratio	Comp. Ratio
10		1073.30	-65.45	-566.58		0.1155
20		1504.57	-55.22	-566.58		0.0975
30	574.05	1504.57		-662.14	0.3815	
40	514.66	1504.57		-675.63	0.3421	
50	590.06	1504.57		-662.14	0.3922	

Analysis of Load Case 19 : FS+BS+EP+OW

From Node	Tensile Stress	All. Tens. Stress	Comp. Stress	All. Comp. Stress	Tens. Ratio	Comp. Ratio
10		1073.30	-65.45	-566.58		0.1155
20		1504.57	-55.22	-566.58		0.0975
30		1504.57	-19.84	-662.14		0.0300
40		1504.57	-16.34	-675.63		0.0242
50		1504.57	-2.38	-662.14		0.0036

Absolute Maximum of the all of the Stress Ratio's 0.3922

Governing Element: Top Head
Governing Load Case 18 : FS+BS+IP+OW

PV Elite 2007 ©1993-2007 by COADE Engineering Software

Shop/Field Installation Options :

```
Insulation is installed in the  Shop.
Lining is installed in the      Shop.
```

Note : The CG is computed from the first Element From Node

Center of Gravity of Liquid	687.7 cm
Center of Gravity of Insulation	898.7 cm
Center of Gravity of Lining	949.0 cm
Center of Gravity of Nozzles	1086.8 cm
Center of Gravity of Added Weights (Empty)	300.0 cm
Center of Gravity of Added Weights (Operating)	935.7 cm
Center of Gravity of Bare Shell New and Cold	806.4 cm
Center of Gravity of Bare Shell Corroded	806.4 cm
Vessel CG in the Operating Condition	834.7 cm
Vessel CG in the Fabricated (Shop/Empty) Condition	774.7 cm

PV Elite 2007 ©1993-2007 by COADE Engineering Software

Skirt Data :

Skirt Outside Diameter at Base	SOD	3161.0000	mm
Skirt Thickness	STHK	16.0000	mm
Skirt Internal Corrosion Allowance	SCA	0.0000	mm
Skirt External Corrosion Allowance		0.0000	mm
Skirt Material		SA-516 70	

Basering Input: Type of Geometry: Continuous Top Ring W/Gussets

Thickness of Basering	TBA	31.5000	mm
Design Temperature of the Basering		37.78	C
Basering Matl		SA-36	
Basering Operating All. Stress	BASOPE	1167.10	kgf/cm²
Basering Yield Stress		2531.05	kgf/cm²
Inside Diameter of Basering	DI	2700.0000	mm
Outside Diameter of Basering	DOU	3480.9998	mm
Nominal Diameter of Bolts	BND	24.0000	mm
Bolt Corrosion Allowance	BCA	0.0000	mm
Root Area of a Single Bolt	Area	3.5548	cm²
Bolt Material		SA-307 C	
Bolt Operating Allowable Stress	SA	1000.00	kgf/cm²
Number of Bolts	NGIV	12	
Diameter of Bolt Circle	DC	3337.0002	mm
Ultimate Comp. Strength of Concrete	FPC	152.9	kgf/cm²
Allowable Comp. Strength of Concrete	FC	52.7	kgf/cm²
Modular ratio Steel/Concrete		9.833	
Thickness of Gusset Plates	TGA	12.5000	mm
Width of Gussets at Top Plate	TWDT	160.0000	mm
Width of Gussets at Base Plate	BWDT	160.0000	mm
Gusset Plate Elastic Modulus	E	2030790.0	kgf/cm²
Gusset Plate Yield Stress	SY	2531.1	kgf/cm²
Height of Gussets	HG	224.0000	mm
Distance between Gussets	RG	100.0000	mm
Dist. from Bolt Center to Gusset (Rg/2)	CG	50.0000	mm
Number of Gussets per bolt	NG	2	
Thickness of Top Plate or Ring	TTA	31.5000	mm
Radial Width of the Top Plate	TOPWTH	160.0000	mm
Anchor Bolt Hole Dia. in Top Plate	BHOLE	54.0000	mm
External Corrosion Allowance	CA	0.0000	mm
Dead Weight of Vessel	DW	61138.0	kgf
Operating Weight of Vessel	ROW	101045.8	kgf
Test Weight of Vessel	TW	121934.4	kgf
Earthquake Moment on Basering	EQMOM	0.0	kgf-m.
Wind Moment on Basering	WIMOM	23304.7	kgf-m.
Test Moment on Basering	TM	23304.7	kgf-m.
Percent Bolt Preload	ppl	100.0	
Use AISC A5.2 Increase in Fc and Bolt Stress		No	
Use Allowable Weld Stress per AISC J2.5		No	
Factor for Increase of Allowables	Fact	1.0000	

Results for Basering Analysis : Analyze Option

Calculation of Load per Bolt,

```
W/Bolt = (( 4 * M/DC ) - W ) / RN per Jawad & Farr, Eq. 12.3
W/Bolt = (( 4 * 23304 / 3337.000 ) - 61137 ) / 12
W/Bolt = -2766.9226 kgf  [** No Uplift ** ]
```

```
Required Area for Each Bolt, Based on Max Load        0.0000  cm²
Area Available in a Single Bolt (Corr)                3.5548  cm²
Area Available in all the Bolts (Corr)               42.6580  cm²
Bolt Stress Based on Approximate Analysis                0.0  kgf/cm²
Allowable Bolt Stress 1000.0  [Fact]                1000.000  kgf/cm²

Concrete Contact Area of Base Ring            CCA   37914.00  cm²
Concrete Contact Section Modulus of Base Ring  2642238464.00  mm ³
```

Calculation of Concrete Load, Test Weight Condition [Sc]:

```
 = ((ppl/100*(Abt*Sa)+W)/Cca) + M/CZ per Jawad & Farr Eq. 12.1
 = (1.000 (42.6580 *1000 +121934 )/37914.00 ) + 23304 /.26422E+10
 = 5.22 kgf/cm²
```

Note: N. A. Shift Calculations not performed due to low bending moment.

Determine Maximum Bending Width of Basering Section [Rw1,Rw2]:

```
 Rw1 = (Dou - SkirtOD)/2,  Rw2 = ( SkirtID - Di + 2*Sca )/2
 Rw1 = (3481.000 -3161.000 )/2, Rw2 = (3129.000 -2700.000 + 2*0.000 )/2
 Rw1 = 160.000 , Rw2 = 214.500 mm
```

Calculation of required Basering Thickness, (Simplified) [Tb]:
Allowable Bending Stress 1.5 Basope = 1750.644 kgf/cm²

```
 = Max(Rw1,Rw2) * ( 3 * Sc / S )½ + CA per Jawad & Farr Eq. 12.12
 = Max(159.9999 ,214.5000 ) * ( 3 * 5.223 / 1750.644 )½ + 0.0000
 = 20.2935 mm
```

Basering Stress at given Thickness [Sb]

```
 = 3 * Sc * ( Max[Rw1, Rw2]/(Tb - Ca) )²
 = 3 * 5.223 * ( Max[160.000 , 214.500 ]/(31.500 - 0.000 ) )²
 = 726.595 , must be less than 1750.644 kgf/cm²
```

Required Thickness of Top Plate in Tension:
(Calculated as a fixed beam per Megyesy)

```
   Ft = (Sa*Abss),        Bolt Allowable Stress * Area
   Rm = (Ft * 2 * Cg)/8,  Bending Moment
   Sb                     Allowable Bending Stress
   Wt = (Topwth   -  Bnd), Width of Section

 T = ( 6 * Rm / ( Sb * Wt ))½ + CA
 T = ( 6 * 44 / ( 1750 * 136.0000 ))½ + 0.0000
 T = 10.5821 mm
```

Required Thickness of Continuous Top Ring per Moss:

```
 a  = ( Dc-SkirtOD )/2   Skirt Distance to Bolt Circle
 P  = Sa*Abss            Bolt Allowable Stress * Area
 l  = Avgwdt             Average Gusset Width
 g1 = Gamma 1            Constant Term f( b/l )
 g2 = Gamma 2            Constant Term f( b/l )
 g  = Flat distance / 2  Nut 1/2 Dimension (from Tema)
 Fb =                    Allowable Bending Stress

 Mo = P/(4pi)[1.3(ln((2lsin(pia/l)/(pig)))+1]-[(0.7-g2)P/(4pi)] Moment Term
 Tc = ( 6 * Abs(Mo) / Fb )½  + CA  Required Thickness
 Tc = ( 6 * 17 / 1750 )½ + 0.000
 Tc = 15.3145 mm
```

Required Thickness of Gusset in Compression, per AISC E2-1:
1. Allowed Compression at Given Thickness:

```
   Factor Kl/r Per E2-1                          62.0757
   Factor Cc Per E2-1                           125.8482
   Allowable Buckling Str. per E2-1              1210.44  kgf/cm²
```

Actual Buckling Str. at Given Thickness	88.87	kgf/cm²
Required Gusset thickness, + CA	3.9579	mm

2. Allowed Compression at Calculated Thickness:

Factor Kl/r Per E2-1	196.0514	
Factor Cc Per E2-1	125.8482	
Allowable Buckling Str. per E2-2	272.07	kgf/cm²
Act. Buckling Str. at Calculated Thickness	280.68	kgf/cm²

Summary of Basering Thickness Calculations:

Required Basering Thickness (simplified)	20.2935	mm
Actual Basering Thickness as entered by user	31.5000	mm
Required Top Ring/Plate Thickness as a Fixed Beam	10.5821	mm
Required Thickness of Continuous Top Ring (Moss)	15.3145	mm
Actual Top Ring Thickness as entered by user	31.5000	mm
Required Gusset thickness, + CA	3.9579	mm
Actual Gusset Thickness as entered by user	12.5000	mm

Weld Size Calculations per Steel Plate Engineering Data - Vol. 2

Compute the Weld load at the Skirt/Base Junction [W]
= SkirtStress * (SkirtThickness - CA)
= 97.504 * (16.000 - 0.000)
= 15.60 kgf/mm

Results for Computed Minimum Basering Weld Size [BWeld]
= W / [(0.4 * Yield) * 2 * 0.707]
= 15 / [(0.4 * 1858) * 2 * 0.707]
= 1.485 mm

Results for Computed Minimum Gusset and Top Plate to Skirt Weld Size

Vertical Plate Load [Wv]
= Bolt Load / (Cmwth + 2 * (Hg + Tta))
= 3554.8 / (125.000 + 2 * (224.000 + 31.500))
= 5.589 kgf/mm

Horizontal Plate Load [Wh]
= Bolt Load * e / (Cmwth * (Hg+Tta) + 0.6667 * (Hg+Tta)²)
= 3554.8 * 88.000 /(125.000 * (255.500) + 0.6667 * (255.500)²)
= 4.146 kgf/mm

Resultant Weld Load [Wr]
= (Wv² + Wh²)½
= (5.59² + 4.15²)½
= 6.959 kgf/mm

Results for Computed Min Gusset and Top Plate to Skirt Weld Size [GsWeld]
= Wr / [(0.4 * Yield) * 2 * 0.707]
= 6.96 / [(0.4 * 1858) * 2 * 0.707]
= 0.662 mm

Results for Computed Minimum Gusset to Top Plate Weld Size

Weld Load [Wv]
= Bolt Load / (2 * TopWth)
= 3554.8 / (2 * 160.000)
= 11.109 kgf/mm

Weld Load [Wh]
= Bolt Load * e / (2 * Hgt * TopWth)
= 3554.8 * 88.00 / (2 * 255.500 * 160.000)

= 3.826 kgf/mm

Resultant Weld Load [Wr]
= (Wv² + Wh²)½
= (11.11² + 3.83²)½
= 11.749 kgf/mm

Results for Computed Min Gusset to Top Plate Weld Size [GtpWeld]
= Wr / [(0.4 * Yield) * 2 * 0.707]
= 11.75 / [(0.4 * 1858) * 2 * 0.707]
= 1.118 mm

Note: The calculated weld sizes need not exceed the component thickness framing into the weld. At the same time, the weld must meet a minimum size specification which is 3/16 in. (4.76 mm) or 1/4 in. (6.35 mm), depending on the component thickness.

Summary of Required Weld Sizes:

Required Basering to Skirt Double Fillet Weld Size	6.3500	mm
Required Gusset to Skirt Double Fillet Weld Size	4.7625	mm
Required Top Plate to Skirt Weld Size	6.3500	mm
Required Gusset to Top Plate Double Fillet Weld Size	1.1180	mm

PV Elite 2007 ©1993-2007 by COADE Engineering Software

INPUT VALUES, Nozzle Description: Noz 2 From : 30

Pressure for Nozzle Reinforcement Calculations	P	32.868	kgf/cm²
Temperature for Internal Pressure	Temp	395	C
Shell Material		SA-387 11	
Shell Allowable Stress at Temperature	S	1504.57	kgf/cm²
Shell Allowable Stress At Ambient	Sa	1504.57	kgf/cm²
Inside Diameter of Elliptical Head	D	3106.0000	mm
Aspect Ratio of Elliptical Head	Ar	2.00	
Head Actual Thickness	T	34.0000	mm
Head Internal Corrosion Allowance	Cas	0.0000	mm
Head External Corrosion Allowance	Caext	0.0000	mm
Physical Maximum for Nozzle Diameter Limit	Dmax	508.0000	mm
Physical Maximum for Nozzle Thickness Limit	Tmax	0.0000	mm
User Entered Minimum Design Metal Temperature		-18.00	C
Nozzle Material		SA-182 F11	
Nozzle Allowable Stress at Temperature	Sn	1388.03	kgf/cm²
Nozzle Allowable Stress At Ambient	Sna	1406.14	kgf/cm²
Nozzle Diameter Basis (for tr calc only)	Inbase	ID	
Layout Angle		270.00	deg
Nozzle Diameter	Dia	12.9921	in.
Nozzle Size and Thickness Basis	Idbn	Actual	
Actual Thickness of Nozzle	Thk	13.0000	mm
Nozzle Flange Material		SA-182 F11	
Nozzle Flange Type		Weld Neck Flange	
Hub Height of Integral Nozzle	h	85.0000	mm
Height of Beveled Transition	L`	68.0000	mm
Hub Thickness of Integral Nozzle (tn or x+tp)		80.0000	mm
Nozzle Corrosion Allowance	Can	0.0000	mm
Joint Efficiency of Shell Seam at Nozzle	Es	1.00	
Joint Efficiency of Nozzle Neck	En	1.00	
Nozzle Outside Projection	Ho	211.0000	mm
Weld leg size between Nozzle and Pad/Shell	Wo	15.0000	mm
Groove weld depth between Nozzle and Vessel	Wgnv	34.0000	mm
Nozzle Inside Projection	H	0.0000	mm
Weld leg size, Inside Nozzle to Shell	Wi	0.0000	mm
ASME Code Weld Type per UW-16		None	
Class of attached Flange		300	
Grade of attached Flange		GR 1.9	

The Pressure Design option was MAWP + static head (to the nozzle)

NOZZLE CALCULATION, Description: Noz 2

ASME Code, Section VIII, Division 1, 2004 A-06, UG-37 to UG-45

Actual Nozzle Inside Diameter Used in Calculation		12.992	in.
Actual Nozzle Thickness Used in Calculation		0.512	in.

Nozzle input data check completed without errors.

Reqd thk per UG-37(a)of Elliptical Head, Tr [Int. Press]

```
 = (P*(K*(D+2*CA)))/(2*S*E-0.2*P) per UG-37(a)(3)
 = (32.87*(0.90*(3106.0000+2*0.0000)))/(2 *1504*1.00-0.2*32.87)
 = 30.6000 mm
```

Reqd thk per UG-37(a)of Nozzle Wall, Trn [Int. Press]

```
 = (P*(D/2+CA))/(S*E-0.6*P) per UG-27 (c)(1)
 = (32.87*(329.9993/2+0.0000))/(1388*1.00-0.6*32.87)
 = 3.9634 mm
```

UG-40, Thickness and Diameter Limit Results : [Int. Press]

Effective material diameter limit,	Dl	508.0000	mm
Effective material thickness limit, no pad	Tlnp	85.0000	mm

Results of Nozzle Reinforcement Area Calculations:

AREA AVAILABLE, A1 to A5		Design	External	Mapnc	
Area Required	Ar	104.772	NA	NA	cm²
Area in Shell	A1	0.000	NA	NA	cm²
Area in Nozzle Wall	A2	14.172	NA	NA	cm²
Area in Inward Nozzle	A3	0.000	NA	NA	cm²
Area in Welds	A4	1.744	NA	NA	cm²
Area in Pad	A5	0.000	NA	NA	cm²
Area in Hub + Bevel	A6	105.078	NA	NA	cm²
TOTAL AREA AVAILABLE	Atot	120.994	NA	NA	cm²

The Internal Pressure Case Governs the Analysis.

Nozzle Angle Used in Area Calculations 90.00 Degs.

The area available without a pad is Sufficient.

Reinforcement Area Required for Nozzle [Ar]:

```
 = (Dlr*Tr+2*Thk*Tr*(1-fr1)) UG-37(c)
 = (329.9993*30.6000+2*(80.0000-0.0000)*30.6000*(1-0.9225))
 = 104.772 cm²

Area 1 has not been Calculated by User Request.
```

Area Available in Nozzle Wall, no Pad [A2np]:

```
 = ( 2 * min(Tlnp,ho) ) * ( Thk - Can - Trn ) * fr2
 = ( 2 * min(85.00 ,211.00 ) ) * ( 13.00 - 0.00 - 3.96 ) * 0.9225 )
 = 14.172 cm²
```

Area Available in Welds, no Pad [A4np]:

```
 = ( Wo² - Area Lost )*fr2 + ( (Wi-Can/0.707)² - Area Lost)*fr2
 = ( 15.0000² - 0.3600 ) * 0.9225 + ( 0.0000² -0.0000 ) * 0.9225
 = 1.744 cm²
```

Area Available in the Hub Section [A6]:

```
 = ( 2 * min(Tlnp,ho,Hubht)) * (Hubtk - Thk) * fr2
 = ( 2 * min(85.0 ,211.0 ,85.0 )) * (80.0 - 13.0 ) * 0.923 )
 =  105.078 cm² Includes Bevel Area of 0.000 cm²
```

UG-45 Minimum Nozzle Neck Thickness Requirement: [Int. Press.]

= Max(Min(Max(Max(UG45B1,UG16B),Max(UG45B2,UG16B)),UG45B4), UG45A)
= Max(Min(Max(Max(34.0000,1.5875),Max(0.0000,1.5875)),8.3344),3.9634)
= 8.3344 < Minimum Nozzle Thickness 13.0000 mm OK

M.A.W.P. Results for this Nozzle (Based on Areas) at this Location

Approximate M.A.W.P. for given geometry 32.595 kgf/cm²

Note: The MAWP of this junction was limited by the shell.

Minimum Design Metal Temperature (Nozzle Neck), Curve: B

Minimum Temp. w/o impact per UCS-66	-21	C
Minimum Temp. at required thickness	-98	C

Nozzle MDMT Thickness Calc. per UCS-66 (a)1(b), MIN(tn,t,te), Curve: B
Minimum Temp. w/o impact per UCS-66 7 C
Minimum Temp. at required thickness -70 C

Weld Size Calculations, Description: Noz 2

Intermediate Calc. for nozzle/shell Welds Tmin 19.0500 mm

Results Per UW-16.1:

	Required Thickness	Actual Thickness
Nozzle Weld	6.3500 = Min per Code	10.6050 = 0.7 * Wo mm

Weld Strength and Weld Loads per UG-41.1, Sketch (a) or (b)

Weld Load [W]:
```
 = (Ar-A1+2*(Thk-can)*Ffr1*(E1(T-Cas)-Tr))*S
 = (104.7721 - 0.0000 + 2 * ( 80.0000 - 0.0000 ) * 0.9225 *
   (1.00 * ( 34.0000 - 0.0000 ) - 30.6000 ) ) * 1504
 = 165187.59 kgf
```

Weld Load [W1]:
```
 = ((A2+A6)+A4-(Wi-Can/.707)²*Fr2)*S
 = ( 119.2499 + 1.7436 - 0.0000 * 0.92 ) * 1504
 = 182043.03 kgf
```

Weld Load [W2]:
```
 = ((A2+A6)+A3+A4+(2*(Thk-Can)*(T-Ca)*Fr1))*S
 = ( 119.2499 + 0.0000 + 1.7436 + 50.1863 ) * 1504
 = 257551.75 kgf
```

Weld Load [W3]:
```
 = ((A2+A6)+A3+A4+A5+(2*(Thk-Can)*(T-Ca)*Fr1))*S
 = ( 119.2499 + 0.0000 + 1.7436 + 0.0000 + 50.1863 ) * 1504
 = 257551.75 kgf
```

Strength of Connection Elements for Failure Path Analysis

Shear, Outward Nozzle Weld [Sonw]:
```
 = (pi/2) * Dlo * Wo * 0.49 * Snw
 = ( 3.1416 / 2.0 ) * 489.9994 * 15.0000 * 0.49 * 1388
 = 78524. kgf
```

Shear, Nozzle Wall [Snw]:
```
 = (pi *( Dlr + Dlo )/4 ) * ( Thk - Can ) * 0.7 * Sn
 = (3.1416 * 204.9997 ) * ( 80.0000 - 0.0000 ) * 0.7 * 1388
 = 500598. kgf
```

Tension, Nozzle Groove Weld [Tngw]:
```
 = (PI/2) * Dlo * (Wgnvi-Cas) * 0.74 * Sng
 = ( 3.1416 / 2.0 ) * 489.9994 * ( 34.0000 - 0.0000 ) * 0.74 * 1388
 = 268797. kgf
```

Strength of Failure Paths:

```
PATH11 = ( SONW + SNW ) = ( 78523 + 500598 ) = 579122 kgf
PATH22 = ( Sonw + Tpgw + Tngw + Sinw )
       = ( 78523 + 0 + 268796 + 0 ) = 347320 kgf
PATH33 = ( Sonw + Tngw + Sinw )
       = ( 78523 + 268796 + 0 ) = 347320 kgf
```

Summary of Failure Path Calculations:
```
Path 1-1 = 579122 kgf, must exceed W = 165187 kgf or W1 = 182043 kgf
Path 2-2 = 347320 kgf, must exceed W = 165187 kgf or W2 = 257551 kgf
Path 3-3 = 347320 kgf, must exceed W = 165187 kgf or W3 = 257551 kgf
```

The Drop for this Nozzle is : 10.6530 mm
The Cut Length for this Nozzle is, Drop + Ho + H + T : 255.6531 mm

Input Echo, WRC107 Item 1, Description: Noz 2 :

Diameter Basis for Vessel	Vbasis	ID	
Cylindrical or Spherical Vessel	Cylsph	Spherical	
Corrosion Allowance for Vessel	Cas	0.0000	mm
Vessel Diameter	Dv	5590.800	mm
Vessel Thickness	Tv	34.000	mm
Design Temperature		395.00	C
Vessel Material		SA-387 11	
Vessel Cold S.I. Allowable	Smc	1504.57	kgf/cm²
Vessel Hot S.I. Allowable	Smh	1504.57	kgf/cm²
Attachment Type	Type	Round	
WRC107 Attachment Classification	Holsol	Hollow	
Diameter Basis for Nozzle	Nbasis	ID	
Corrosion Allowance for Nozzle	Can	0.0000	mm
Nozzle Diameter	Dn	330.000	mm
Nozzle Thickness	Tn	80.000	mm
Nozzle Material		SA-182 F11	
Nozzle Cold S.I. Allowable	SNmc	1406.14	kgf/cm²
Nozzle Hot S.I. Allowable	SNmh	1388.03	kgf/cm²
Design Internal Pressure	Dp	32.868	kgf/cm²
Include Pressure Thrust		No	

External Forces and Moments in WRC 107 Convention:

Radial Load	(SUS)		P	1796.0	kgf
Longitudinal Shear	(SUS)	(Vl)	V1	1496.0	kgf
Circumferential Shear	(SUS)	(Vc)	V2	1496.0	kgf
Circumferential Moment	(SUS)	(Mc)	M1	1521.0	kgf-m.
Longitudinal Moment	(SUS)	(Ml)	M2	1521.0	kgf-m.
Torsional Moment	(SUS)		Mt	1267.0	kgf-m.

Compute Maximum Radial Force	No
Compute Maximum Circumferential Moment	No
Compute Maximum Longitudinal Moment	No
Use Interactive Control	No
WRC107 Version	Version March 1979
Include Pressure Stress Indices per Div. 2	No
Compute Pressure Stress per WRC-368	No

WRC 107 Stress Calculation for SUStained loads:

Radial Load		P	1796.0	kgf
Circumferential Shear	(VC)	V2	1496.0	kgf
Longitudinal Shear	(VL)	V1	1496.0	kgf
Circumferential Moment	(MC)	M1	1521.0	kgf-m.
Longitudinal Moment	(ML)	M2	1521.0	kgf-m.
Torsional Moment		MT	1267.0	kgf-m.

Dimensionless Param: U = 0.79 TAU = 5.00 (2.56) RHO = 0.43

Dimensionless Loads for Spherical Shells at Attachment Junction:

Curves read for 1979	Figure	Value	Location
N(x) * T / P	SP 1	0.05106	(A,B,C,D)

```
M(x)      / P                       SP 1    0.05716   (A,B,C,D)
N(x) * T * SQRT(Rm * T ) / MC       SM 1    0.06409   (A,B,C,D)
M(x)      * SQRT(Rm * T ) / MC      SM 1    0.11837   (A,B,C,D)
N(x) * T * SQRT(Rm * T ) / ML       SM 1    0.06409   (A,B,C,D)
M(x)      * SQRT(Rm * T ) / ML      SM 1    0.11837   (A,B,C,D)

N(y) * T / P                        SP 1    0.08208   (A,B,C,D)
M(y)      / P                       SP 1    0.01673   (A,B,C,D)
N(y) * T * SQRT(Rm * T ) / MC       SM 1    0.08163   (A,B,C,D)
M(y)      * SQRT(Rm * T ) / MC      SM 1    0.03905   (A,B,C,D)
N(y) * T * SQRT(Rm * T ) / ML       SM 1    0.08163   (A,B,C,D)
M(y)      * SQRT(Rm * T ) / ML      SM 1    0.03905   (A,B,C,D)

Stress Concentration Factors Kn = 1.00,   Kb = 1.00
```

Stresses in the Vessel at the Attachment Junction

Type of Stress	Load	Stress Values at (kgf/cm²) Au	Al	Bu	Bl	Cu	Cl	Du	Dl
Rad.	Memb. P	-7	-7	-7	-7	-7	-7	-7	-7
Rad.	Bend. P	-53	53	-53	53	-53	53	-53	53
Rad.	Memb. MC	0	0	0	0	-27	-27	27	27
Rad.	Bend. MC	0	0	0	0	-302	302	302	-302
Rad.	Memb. ML	-27	-27	27	27	0	0	0	0
Rad.	Bend. ML	-302	302	302	-302	0	0	0	0
Tot. Rad.	Str.	-390.7	320.3	268.2	-229.6	-390.7	320.3	268.2	-229.6
Tang.	Memb. P	-12	-12	-12	-12	-12	-12	-12	-12
Tang.	Bend. P	-15	15	-15	15	-15	15	-15	15
Tang.	Memb. MC	0	0	0	0	-34	-34	34	34
Tang.	Bend. MC	0	0	0	0	-99	99	99	-99
Tang.	Memb. ML	-34	-34	34	34	0	0	0	0
Tang.	Bend. ML	-99	99	99	-99	0	0	0	0
Tot. Tang.	Str.	-162.8	67.8	106.1	-62.1	-162.8	67.8	106.1	-62.1
	Shear VC	5	5	-5	-5	0	0	0	0
	Shear VL	0	0	0	0	-5	-5	5	5
	Shear MT	9	9	9	9	9	9	9	9
	Tot. Shear	15.6	15.6	4.2	4.2	4.2	4.2	15.6	15.6
	Str. Int.	391.74	321.23	268.35	229.68	390.75	320.34	269.73	231.01

WRC 107 Stress Summations:

Vessel Stress Summation at Attachment Junction

Type of Stress Int.	Location	Stress Values at (kgf/cm²) Au	Al	Bu	Bl	Cu	Cl	Du	Dl
Rad.	Pm (SUS)	1351	1351	1351	1351	1351	1351	1351	1351
Rad.	Pl (SUS)	-35	-35	19	19	-35	-35	19	19
Rad.	Q (SUS)	-355	355	248	-248	-355	355	248	-248
Long.	Pm (SUS)	1351	1351	1351	1351	1351	1351	1351	1351
Long.	Pl (SUS)	-47	-47	21	21	-47	-47	21	21
Long.	Q (SUS)	-115	115	84	-84	-115	115	84	-84

Shear Pm (SUS)	0	0	0	0	0	0	0	0
Shear Pl (SUS)	5	5	-5	-5	-5	-5	5	5
Shear Q (SUS)	9	9	9	9	9	9	9	9
Pm (SUS)	1351	1351	1351	1351	1351	1351	1351	1351
Pm+Pl (SUS)	1318	1318	1377	1377	1318	1318	1377	1377
Pm+Pl+Q (Total)	1189	1672	1619	1289	1188	1671	1621	1290

Type of Stress Int.	Max. S.I. kgf/cm²	S.I. Allowable kgf/cm²	Result
Pm (SUS)	1351.29	1504.57	Passed
Pm+Pl (SUS)	1377.81	2256.85	Passed
Pm+Pl+Q (TOTAL)	1672.52	4513.71	Passed

PV Elite 2007 ©1993-2007 by COADE Engineering Software

INPUT VALUES, Nozzle Description: Noz 11 A/B From : 30

Pressure for Nozzle Reinforcement Calculations	P	32.853	kgf/cm²
Temperature for Internal Pressure	Temp	395	C
Shell Material		SA-387 11	
Shell Allowable Stress at Temperature	S	1504.57	kgf/cm²
Shell Allowable Stress At Ambient	Sa	1504.57	kgf/cm²
Inside Diameter of Elliptical Head	D	3106.0000	mm
Aspect Ratio of Elliptical Head	Ar	2.00	
Head Actual Thickness	T	34.0000	mm
Head Internal Corrosion Allowance	Cas	0.0000	mm
Head External Corrosion Allowance	Caext	0.0000	mm
Distance from Cylinder/Head Centerline	L1	976.9980	mm
User Entered Minimum Design Metal Temperature		-18.00	C
Nozzle Material		SA-182 F11	
Nozzle Allowable Stress at Temperature	Sn	1388.03	kgf/cm²
Nozzle Allowable Stress At Ambient	Sna	1406.14	kgf/cm²
Nozzle Diameter Basis (for tr calc only)	Inbase	ID	
Layout Angle		180.00	deg
Nozzle Diameter	Dia	7.6378	in.
Nozzle Size and Thickness Basis	Idbn	Actual	
Actual Thickness of Nozzle	Thk	12.5000	mm
Nozzle Flange Material		SA-182 F11	
Nozzle Flange Type		Weld Neck Flange	
Hub Height of Integral Nozzle	h	92.0000	mm
Height of Beveled Transition	L`	42.0000	mm
Hub Thickness of Integral Nozzle (tn or x+tp)		55.0000	mm
Nozzle Corrosion Allowance	Can	0.0000	mm
Joint Efficiency of Shell Seam at Nozzle	Es	1.00	
Joint Efficiency of Nozzle Neck	En	1.00	
Nozzle Outside Projection	Ho	1611.0000	mm
Weld leg size between Nozzle and Pad/Shell	Wo	15.0000	mm
Groove weld depth between Nozzle and Vessel	Wgnv	34.0000	mm
Nozzle Inside Projection	H	0.0000	mm
Weld leg size, Inside Nozzle to Shell	Wi	0.0000	mm
ASME Code Weld Type per UW-16		None	
Class of attached Flange		300	
Grade of attached Flange		GR 1.9	

The Pressure Design option was MAWP + static head (to the nozzle)

NOZZLE CALCULATION, Description: Noz 11 A/B

ASME Code, Section VIII, Division 1, 2004 A-06, UG-37 to UG-45

Actual Nozzle Inside Diameter Used in Calculation	7.638	in.
Actual Nozzle Thickness Used in Calculation	0.492	in.

Nozzle input data check completed without errors.

Reqd thk per UG-37(a)of Elliptical Head, Tr [Int. Press]
= (P*(K*(D+2*CA)))/(2*S*E-0.2*P) per UG-37(a)(3)

= (32.85*(0.90*(3106.0000+2*0.0000)))/(2 *1504*1.00-0.2*32.85)
= 30.5858 mm

Reqd thk per UG-37(a)of Nozzle Wall, Trn [Int. Press]
= (P*(D/2+CA))/(S*E-0.6*P) per UG-27 (c)(1)
= (32.85*(194.0001/2+0.0000))/(1388*1.00-0.6*32.85)
= 2.3289 mm

UG-40, Thickness and Diameter Limit Results : [Int. Press]

Effective material diameter limit,	Dl	419.1567	mm
Effective material thickness limit, no pad	Tlnp	85.0000	mm

Results of Nozzle Reinforcement Area Calculations:

AREA AVAILABLE, A1 to A5		Design	External	Mapnc	
Area Required	Ar	66.707	NA	NA	cm²
Area in Shell	A1	0.000	NA	NA	cm²
Area in Nozzle Wall	A2	15.951	NA	NA	cm²
Area in Inward Nozzle	A3	0.000	NA	NA	cm²
Area in Welds	A4	2.076	NA	NA	cm²
Area in Pad	A5	0.000	NA	NA	cm²
Area in Hub	A6	66.654	NA	NA	cm²
TOTAL AREA AVAILABLE	Atot	84.681	NA	NA	cm²

The Internal Pressure Case Governs the Analysis.

Nozzle Angle Used in Area Calculations		67.77	Degs.

The area available without a pad is Sufficient.

Reinforcement Area Required for Nozzle [Ar]:
= (Dlr*Tr+2*Thk*Tr*(1-fr1)) UG-37(c)
= (209.5783*30.5858+2*(55.0000-0.0000)*30.5858*(1-0.9225))
= 66.707 cm²

Area 1 has not been Calculated by User Request.

Area Available in Nozzle Wall, no Pad [A2np]:
= (2 * min(Tlnp,ho)) * (Thk - Can - Trn) * fr2
= (2 * min(85.00 ,1611.00)) * (12.50 - 0.00 - 2.33) * 0.9225)
= 15.951 cm²

Area Available in Welds, no Pad [A4np]:
= Wo² * fr2 + (Wi-Can/0.707)² * fr2
= 15.0000² * 0.9225 + (0.0000)² * 0.9225
= 2.076 cm²

Area Available in the Hub Section [A6]:
= (2 * min(Tlnp,ho,Hubht)) * (Hubtk - Thk) * fr2
= (2 * min(85.0 ,1611.0 ,92.0)) * (55.0 - 12.5) * 0.923)
= 66.654 cm²

UG-45 Minimum Nozzle Neck Thickness Requirement: [Int. Press.]
= Max(Min(Max(Max(UG45B1,UG16B),Max(UG45B2,UG16B)),UG45B4), UG45A)
= Max(Min(Max(Max(33.9842,1.5875),Max(0.0000,1.5875)),7.1564),2.3289)
= 7.1564 < Minimum Nozzle Thickness 12.5000 mm OK

M.A.W.P. Results for this Nozzle (Based on Areas) at this Location

Approximate M.A.W.P. for given geometry	32.595	kgf/cm²

Note: The MAWP of this junction was limited by the shell.

Minimum Design Metal Temperature (Nozzle Neck), Curve: B

Minimum Temp. w/o impact per UCS-66	-22	C
Minimum Temp. at required thickness	-100	C

Nozzle MDMT Thickness Calc. per UCS-66 (a)1(b), MIN(tn,t,te), Curve: B
Minimum Temp. w/o impact per UCS-66 7 C
Minimum Temp. at required thickness -70 C

Weld Size Calculations, Description: Noz 11 A/B

Intermediate Calc. for nozzle/shell Welds Tmin 19.0500 mm

Results Per UW-16.1:

	Required Thickness	Actual Thickness
Nozzle Weld	6.3500 = Min per Code	10.6050 = 0.7 * Wo mm

Weld Strength and Weld Loads per UG-41.1, Sketch (a) or (b)

Weld Load [W]:
```
 = (Ar-A1+2*(Thk-can)*Ffr1*(E1(T-Cas)-Tr))*S
 = (66.7073 - 0.0000 + 2 * ( 55.0000 - 0.0000 ) * 0.9225 *
   (1.00 * ( 34.0000 - 0.0000 ) - 30.5858 ) ) * 1504
 = 105578.56 kgf
```

Weld Load [W1]:
```
 = ((A2+A6)+A4-(Wi-Can/.707)²*Fr2)*S
 = ( 82.6050 + 2.0757 - 0.0000 * 0.92 ) * 1504
 = 127407.88 kgf
```

Weld Load [W2]:
```
 = ((A2+A6)+A3+A4+(2*(Thk-Can)*(T-Ca)*Fr1))*S
 = ( 82.6050 + 0.0000 + 2.0757 + 34.5030 ) * 1504
 = 179319.98 kgf
```

Weld Load [W3]:
```
 = ((A2+A6)+A3+A4+A5+(2*(Thk-Can)*(T-Ca)*Fr1))*S
 = ( 82.6050 + 0.0000 + 2.0757 + 0.0000 + 34.5030 ) * 1504
 = 179319.98 kgf
```

Strength of Connection Elements for Failure Path Analysis

Shear, Outward Nozzle Weld [Sonw]:
```
 = (pi/2) * Dlo * Wo * 0.49 * Snw
 = ( 3.1416 / 2.0 ) * 328.4113 * 15.0000 * 0.49 * 1388
 = 52629. kgf
```

Shear, Nozzle Wall [Snw]:
```
 = (pi *( Dlr + Dlo )/4 ) * ( Thk - Can ) * 0.7 * Sn
 = (3.1416 * 134.4974 ) * ( 55.0000 - 0.0000 ) * 0.7 * 1388
 = 225799. kgf
```

Tension, Nozzle Groove Weld [Tngw]:
```
 = (PI/2) * Dlo * (Wgnvi-Cas) * 0.74 * Sng
 = ( 3.1416 / 2.0 ) * 328.4113 * ( 34.0000 - 0.0000 ) * 0.74 * 1388
 = 180155. kgf
```

Strength of Failure Paths:

```
 PATH11 = ( SONW + SNW ) = ( 52628 + 225798 ) = 278427 kgf
 PATH22 = ( Sonw + Tpgw + Tngw + Sinw )
        = ( 52628 + 0 + 180154 + 0 ) = 232783 kgf
 PATH33 = ( Sonw + Tngw + Sinw )
        = ( 52628 + 180154 + 0 ) = 232783 kgf
```

Summary of Failure Path Calculations:
```
Path 1-1 = 278427 kgf, must exceed W = 105578 kgf or W1 = 127407 kgf
Path 2-2 = 232783 kgf, must exceed W = 105578 kgf or W2 = 179319 kgf
Path 3-3 = 232783 kgf, must exceed W = 105578 kgf or W3 = 179319 kgf
```

Note : Checking Nozzle in the Latitudinal direction.

NOZZLE CALCULATION, Description: Noz 11 A/B

ASME Code, Section VIII, Division 1, 2004 A-06, UG-37 to UG-45

```
Actual Nozzle Inside Diameter Used in Calculation      7.638  in.
Actual Nozzle Thickness Used in Calculation            0.492  in.
```

Nozzle input data check completed without errors.

Reqd thk per UG-37(a)of Elliptical Head, Tr [Int. Press]
```
 = (P*(K*(D+2*CA)))/(2*S*E-0.2*P) per UG-37(a)(3)
 = (32.85*(0.90*(3106.0000+2*0.0000)))/(2 *1504*1.00-0.2*32.85)
 = 30.5858 mm
```

Reqd thk per UG-37(a)of Nozzle Wall, Trn [Int. Press]
```
 = (P*(D/2+CA))/(S*E-0.6*P) per UG-27 (c)(1)
 = (32.85*(194.0001/2+0.0000))/(1388*1.00-0.6*32.85)
 = 2.3289 mm
```

UG-40, Thickness and Diameter Limit Results : [Int. Press]

```
Effective material diameter limit,              Dl   388.0002  mm
Effective material thickness limit, no pad   Tlnp    85.0000  mm
```

Results of Nozzle Reinforcement Area Calculations:

```
AREA AVAILABLE, A1 to A5          Design  External     Mapnc
Area Required              Ar     61.943        NA        NA  cm²
Area in Shell              A1      0.000        NA        NA  cm²
Area in Nozzle Wall        A2     15.951        NA        NA  cm²
Area in Inward Nozzle      A3      0.000        NA        NA  cm²
Area in Welds              A4      2.076        NA        NA  cm²
Area in Pad                A5      0.000        NA        NA  cm²
Area in Hub                A6     66.654        NA        NA  cm²
TOTAL AREA AVAILABLE     Atot     84.681        NA        NA  cm²
```

The Internal Pressure Case Governs the Analysis.

```
Nozzle Angle Used in Area Calculations                 90.00  Degs.
```

The area available without a pad is Sufficient.

Reinforcement Area Required for Nozzle [Ar]:
```
 = (Dlr*Tr+2*Thk*Tr*(1-fr1)) UG-37(c)
 = (194.0001*30.5858+2*(55.0000-0.0000)*30.5858*(1-0.9225))
 = 61.943 cm²
```

```
Area 1 has not been Calculated by User Request.
```

Area Available in Nozzle Wall, no Pad [A2np]:
```
 = ( 2 * min(Tlnp,ho) ) * ( Thk - Can - Trn ) * fr2
 = ( 2 * min(85.00 ,1611.00 ) ) * ( 12.50 - 0.00 - 2.33 ) * 0.9225 )
 = 15.951 cm²
```

Area Available in Welds, no Pad [A4np]:
```
 = Wo² * fr2 + ( Wi-Can/0.707 )² * fr2
 = 15.0000² * 0.9225 + ( 0.0000 )² * 0.9225
 = 2.076 cm²
```

Area Available in the Hub Section [A6]:
```
 = ( 2 * min(Tlnp,ho,Hubht)) * (Hubtk - Thk) * fr2
 = ( 2 * min(85.0 ,1611.0 ,92.0 )) * (55.0 - 12.5 ) * 0.923 )
 = 66.654 cm²
```

UG-45 Minimum Nozzle Neck Thickness Requirement: [Int. Press.]
= Max(Min(Max(Max(UG45B1,UG16B),Max(UG45B2,UG16B)),UG45B4), UG45A)

= Max(Min(Max(Max(33.9842,1.5875),Max(0.0000,1.5875)),7.1564),2.3289)
= 7.1564 < Minimum Nozzle Thickness 12.5000 mm OK

M.A.W.P. Results for this Nozzle (Based on Areas) at this Location
Approximate M.A.W.P. for given geometry 32.595 kgf/cm²

Note: The MAWP of this junction was limited by the shell.

Weld Size Calculations, Description: Noz 11 A/B

Intermediate Calc. for nozzle/shell Welds Tmin 19.0500 mm

Results Per UW-16.1:

	Required Thickness	Actual Thickness
Nozzle Weld	6.3500 = Min per Code	10.6050 = 0.7 * Wo mm

Weld Strength and Weld Loads per UG-41.1, Sketch (a) or (b)

Weld Load [W]:
```
 = (Ar-A1+2*(Thk-can)*Ffr1*(E1(T-Cas)-Tr))*S
 = (61.9426 - 0.0000 + 2 * ( 55.0000 - 0.0000 ) * 0.9225 *
   (1.00 * ( 34.0000 - 0.0000 ) - 30.5858 ) ) * 1504
 = 98409.71 kgf
```

Weld Load [W1]:
```
 = ((A2+A6)+A4-(Wi-Can/.707)²*Fr2)*S
 = ( 82.6050 + 2.0757 - 0.0000 * 0.92 ) * 1504
 = 127407.88 kgf
```

Weld Load [W2]:
```
 = ((A2+A6)+A3+A4+(2*(Thk-Can)*(T-Ca)*Fr1))*S
 = ( 82.6050 + 0.0000 + 2.0757 + 34.5030 ) * 1504
 = 179319.98 kgf
```

Weld Load [W3]:
```
 = ((A2+A6)+A3+A4+A5+(2*(Thk-Can)*(T-Ca)*Fr1))*S
 = ( 82.6050 + 0.0000 + 2.0757 + 0.0000 + 34.5030 ) * 1504
 = 179319.98 kgf
```

Strength of Connection Elements for Failure Path Analysis

Shear, Outward Nozzle Weld [Sonw]:
```
 = (pi/2) * Dlo * Wo * 0.49 * Snw
 = ( 3.1416 / 2.0 ) * 304.0001 * 15.0000 * 0.49 * 1388
 = 48717. kgf
```

Shear, Nozzle Wall [Snw]:
```
 = (pi *( Dlr + Dlo )/4 ) * ( Thk - Can ) * 0.7 * Sn
 = (3.1416 * 124.5001 ) * ( 55.0000 - 0.0000 ) * 0.7 * 1388
 = 209015. kgf
```

Tension, Nozzle Groove Weld [Tngw]:
```
 = (PI/2) * Dlo * (Wgnvi-Cas) * 0.74 * Sng
 = ( 3.1416 / 2.0 ) * 304.0001 * ( 34.0000 - 0.0000 ) * 0.74 * 1388
 = 166764. kgf
```

Strength of Failure Paths:

```
PATH11 = ( SONW + SNW ) = ( 48716 + 209014 ) = 257731 kgf
PATH22 = ( Sonw + Tpgw + Tngw + Sinw )
       = ( 48716 + 0 + 166763 + 0 ) = 215480 kgf
PATH33 = ( Sonw + Tngw + Sinw )
       = ( 48716 + 166763 + 0 ) = 215480 kgf
```

Summary of Failure Path Calculations:
Path 1-1 = 257731 kgf, must exceed W = 98409 kgf or W1 = 127407 kgf

```
Path 2-2 = 215480 kgf, must exceed W = 98409 kgf or W2 = 179319 kgf
Path 3-3 = 215480 kgf, must exceed W = 98409 kgf or W3 = 179319 kgf
```

The Drop for this Nozzle is : 61.1472 mm
The Cut Length for this Nozzle is, Drop + Ho + H + T : 1708.3582 mm

PV Elite 2007 ©1993-2007 by COADE Engineering Software

INPUT VALUES, Nozzle Description: Noz 8A/B From : 40

Pressure for Nozzle Reinforcement Calculations	P	32.773	kgf/cm²
Temperature for Internal Pressure	Temp	395	C
Shell Material		SA-387 11	
Shell Allowable Stress at Temperature	S	1504.57	kgf/cm²
Shell Allowable Stress At Ambient	Sa	1504.57	kgf/cm²
Inside Diameter of Cylindrical Shell	D	3107.0000	mm
Shell Actual Thickness	T	38.0000	mm
Shell Internal Corrosion Allowance	Cas	0.0000	mm
Shell External Corrosion Allowance	Caext	0.0000	mm
Distance from Cylinder/Head Centerline	L1	520.0000	mm
Distance from Bottom/Left Tangent		30.0000	cm
User Entered Minimum Design Metal Temperature		-18.00	C
Nozzle Material		SA-182 F11	
Nozzle Allowable Stress at Temperature	Sn	1388.03	kgf/cm²
Nozzle Allowable Stress At Ambient	Sna	1406.14	kgf/cm²
Nozzle Diameter Basis (for tr calc only)	Inbase	ID	
Layout Angle		180.00	deg
Nozzle Diameter	Dia	5.7480	in.
Nozzle Size and Thickness Basis	Idbn	Actual	
Actual Thickness of Nozzle	Thk	11.0000	mm
Nozzle Flange Material		SA-182 F11	
Nozzle Flange Type		Weld Neck Flange	
Hub Height of Integral Nozzle	h	95.0000	mm
Height of Beveled Transition	L`	39.0000	mm
Hub Thickness of Integral Nozzle (tn or x+tp)		50.0000	mm
Style of FVC Nozzle		Heavy Barrel	
Nozzle Corrosion Allowance	Can	0.0000	mm
Joint Efficiency of Shell Seam at Nozzle	Es	1.00	
Joint Efficiency of Nozzle Neck	En	1.00	
Nozzle Outside Projection	Ho	268.0000	mm
Weld leg size between Nozzle and Pad/Shell	Wo	15.0000	mm
Groove weld depth between Nozzle and Vessel	Wgnv	38.0000	mm
Nozzle Inside Projection	H	0.0000	mm
Weld leg size, Inside Nozzle to Shell	Wi	0.0000	mm
ASME Code Weld Type per UW-16		None	
Class of attached Flange		300	
Grade of attached Flange		GR 1.9	

The Pressure Design option was MAWP + static head (to the nozzle)

Note : Checking Nozzle 90 degrees to the Longitudinal axis.

NOZZLE CALCULATION, Description: Noz 8A/B

ASME Code, Section VIII, Division 1, 2004 A-06, UG-37 to UG-45

Actual Nozzle Inside Diameter Used in Calculation	5.748	in.
Actual Nozzle Thickness Used in Calculation	0.433	in.

Nozzle input data check completed without errors.

Reqd thk per UG-37(a)of Cylindrical Shell, Tr [Int. Press]
= (P*(D/2+CA))/(S*E-0.6*P) per UG-27 (c)(1)
= (32.77*(3107.0000/2+0.0000))/(1504*1.00-0.6*32.77)
= 34.2870 mm

Reqd thk per UG-37(a)of Nozzle Wall, Trn [Int. Press]
= (P*(D/2+CA))/(S*E-0.6*P) per UG-27 (c)(1)
= (32.77*(146.0000/2+0.0000))/(1388*1.00-0.6*32.77)
= 1.7484 mm

UG-40, Thickness and Diameter Limit Results : [Int. Press]

Effective material diameter limit,	Dl	309.6231	mm
Effective material thickness limit, no pad	Tlnp	95.0000	mm

Results of Nozzle Reinforcement Area Calculations:

AREA AVAILABLE, A1 to A5		Design	External	Mapnc	
Area Required	Ar	27.868	NA	NA	cm^2
Area in Shell	A1	0.000	NA	NA	cm^2
Area in Nozzle Wall	A2	16.216	NA	NA	cm^2
Area in Inward Nozzle	A3	0.000	NA	NA	cm^2
Area in Welds	A4	2.076	NA	NA	cm^2
Area in Pad	A5	0.000	NA	NA	cm^2
Area in Hub	A6	68.360	NA	NA	cm^2
TOTAL AREA AVAILABLE	Atot	86.652	NA	NA	cm^2

The Internal Pressure Case Governs the Analysis.

Nozzle Angle Used in Area Calculations 70.58 Degs.

The area available without a pad is Sufficient.

Note: The value of tr in the following equation has been multiplied by
the F correction factor of 0.5.

Reinforcement Area Required for Nozzle [Ar]:
= (Dlr*Tr+2*Thk*Tr*(1-fr1)) UG-37(c)
= (154.8116*17.1435+2*(50.0000-0.0000)*17.1435*(1-0.9225))
= 27.868 cm^2

Area 1 has not been Calculated by User Request.

Area Available in Nozzle Wall, no Pad [A2np]:
= (2 * min(Tlnp,ho)) * (Thk - Can - Trn) * fr2
= (2 * min(95.00 ,268.00)) * (11.00 - 0.00 - 1.75) * 0.9225)
= 16.216 cm^2

Area Available in Welds, no Pad [A4np]:
= Wo^2 * fr2 + (Wi-Can/0.707)^2 * fr2
= 15.0000^2 * 0.9225 + (0.0000)^2 * 0.9225
= 2.076 cm^2

Area Available in the Hub Section [A6]:
= (2 * min(Tlnp,ho,Hubht)) * (Hubtk - Thk) * fr2
= (2 * min(95.0 ,268.0 ,95.0)) * (50.0 - 11.0) * 0.923)
= 68.360 cm^2

UG-45 Minimum Nozzle Neck Thickness Requirement: [Int. Press.]
= Max(Min(Max(Max(UG45B1,UG16B),Max(UG45B2,UG16B)),UG45B4), UG45A)
= Max(Min(Max(Max(34.2870,1.5875),Max(0.0000,1.5875)),6.2230),1.7484)
= 6.2230 < Minimum Nozzle Thickness 11.0000 mm OK

M.A.W.P. Results for this Nozzle (Based on Areas) at this Location
Approximate M.A.W.P. for given geometry 36.069 kgf/cm^2

Note: The MAWP of this junction was limited by the shell.

Minimum Design Metal Temperature (Nozzle Neck), Curve: B
```
Minimum Temp. w/o impact per UCS-66              -26  C
Minimum Temp. at required thickness             -104  C
```

Nozzle MDMT Thickness Calc. per UCS-66 (a)1(b), MIN(tn,t,te), Curve: B
```
Minimum Temp. w/o impact per UCS-66               10  C
Minimum Temp. at required thickness              -68  C
```

Weld Size Calculations, Description: Noz 8A/B

```
Intermediate Calc. for nozzle/shell Welds   Tmin     19.0500  mm
```

Results Per UW-16.1:

	Required Thickness	Actual Thickness
Nozzle Weld	6.3500 = Min per Code	10.6050 = 0.7 * Wo mm

Weld Strength and Weld Loads per UG-41.1, Sketch (a) or (b)

Weld Load [W]:
```
 = (Ar-A1+2*(Thk-can)*Ffr1*(E1(T-Cas)-Tr))*S
 = (27.8680 - 0.0000 + 2 * ( 50.0000 - 0.0000 ) * 0.9225 *
   (1.00 * ( 38.0000 - 0.0000 ) - 17.1435 ) ) * 1504
 = 70878.69 kgf
```

Weld Load [W1]:
```
 = ((A2+A6)+A4-(Wi-Can/.707)²*Fr2)*S
 = ( 84.5767 + 2.0757 - 0.0000 * 0.92 ) * 1504
 = 130374.41 kgf
```

Weld Load [W2]:
```
 = ((A2+A6)+A3+A4+(2*(Thk-Can)*(T-Ca)*Fr1))*S
 = ( 84.5767 + 0.0000 + 2.0757 + 35.0565 ) * 1504
 = 183119.31 kgf
```

Weld Load [W3]:
```
 = ((A2+A6)+A3+A4+A5+(2*(Thk-Can)*(T-Ca)*Fr1))*S
 = ( 84.5767 + 0.0000 + 2.0757 + 0.0000 + 35.0565 ) * 1504
 = 183119.31 kgf
```

Strength of Connection Elements for Failure Path Analysis

Shear, Outward Nozzle Weld [Sonw]:
```
 = (pi/2) * Dlo * Wo * 0.49 * Snw
 = ( 3.1416 / 2.0 ) * 260.8469 * 15.0000 * 0.49 * 1388
 = 41801. kgf
```

Shear, Nozzle Wall [Snw]:
```
 = (pi *( Dlr + Dlo )/4 ) * ( Thk - Can ) * 0.7 * Sn
 = (3.1416 * 103.9146 ) * ( 50.0000 - 0.0000 ) * 0.7 * 1388
 = 158596. kgf
```

Tension, Nozzle Groove Weld [Tngw]:
```
 = (PI/2) * Dlo * (Wgnvi-Cas) * 0.74 * Sng
 = ( 3.1416 / 2.0 ) * 260.8469 * ( 38.0000 - 0.0000 ) * 0.74 * 1388
 = 159926. kgf
```

Strength of Failure Paths:

```
PATH11 = ( SONW + SNW ) = ( 41801 + 158595 ) = 200397 kgf
PATH22 = ( Sonw + Tpgw + Tngw + Sinw )
       = ( 41801 + 0 + 159925 + 0 ) = 201726 kgf
PATH33 = ( Sonw + Tngw + Sinw )
       = ( 41801 + 159925 + 0 ) = 201726 kgf
```

Summary of Failure Path Calculations:

```
Path 1-1 = 200397 kgf, must exceed W = 70878 kgf or W1 = 130374 kgf
Path 2-2 = 201726 kgf, must exceed W = 70878 kgf or W2 = 183119 kgf
Path 3-3 = 201726 kgf, must exceed W = 70878 kgf or W3 = 183119 kgf
```

Note : Checking Nozzle in plane parallel to the vessel axis.

NOZZLE CALCULATION, Description: Noz 8A/B

ASME Code, Section VIII, Division 1, 2004 A-06, UG-37 to UG-45

```
Actual Nozzle Inside Diameter Used in Calculation      5.748  in.
Actual Nozzle Thickness Used in Calculation            0.433  in.
```

Nozzle input data check completed without errors.

Reqd thk per UG-37(a)of Cylindrical Shell, Tr [Int. Press]

```
 = (P*(D/2+CA))/(S*E-0.6*P) per UG-27 (c)(1)
 = (32.77*(3107.0000/2+0.0000))/(1504*1.00-0.6*32.77)
 = 34.2870 mm
```

Reqd thk per UG-37(a)of Nozzle Wall, Trn [Int. Press]

```
 = (P*(D/2+CA))/(S*E-0.6*P) per UG-27 (c)(1)
 = (32.77*(146.0000/2+0.0000))/(1388*1.00-0.6*32.77)
 = 1.7484 mm
```

UG-40, Thickness and Diameter Limit Results : [Int. Press]

```
Effective material diameter limit,              Dl   292.0000  mm
Effective material thickness limit, no pad   Tlnp    95.0000  mm
```

Results of Nozzle Reinforcement Area Calculations:

AREA AVAILABLE, A1 to A5		Design	External	Mapnc	
Area Required	Ar	52.715	NA	NA	cm²
Area in Shell	A1	0.000	NA	NA	cm²
Area in Nozzle Wall	A2	16.216	NA	NA	cm²
Area in Inward Nozzle	A3	0.000	NA	NA	cm²
Area in Welds	A4	2.076	NA	NA	cm²
Area in Pad	A5	0.000	NA	NA	cm²
Area in Hub	A6	68.360	NA	NA	cm²
TOTAL AREA AVAILABLE	Atot	86.652	NA	NA	cm²

The Internal Pressure Case Governs the Analysis.

```
Nozzle Angle Used in Area Calculations                 90.00  Degs.
```

The area available without a pad is Sufficient.

Reinforcement Area Required for Nozzle [Ar]:

```
 = (Dlr*Tr+2*Thk*Tr*(1-fr1)) UG-37(c)
 = (146.0000*34.2870+2*(50.0000-0.0000)*34.2870*(1-0.9225))
 = 52.715 cm²
```

```
Area 1 has not been Calculated by User Request.
```

Area Available in Nozzle Wall, no Pad [A2np]:

```
 = ( 2 * min(Tlnp,ho) ) * ( Thk - Can - Trn ) * fr2
 = ( 2 * min(95.00 ,268.00 ) ) * ( 11.00 - 0.00 - 1.75 ) * 0.9225 )
 = 16.216 cm²
```

Area Available in Welds, no Pad [A4np]:

```
 = Wo² * fr2 + ( Wi-Can/0.707 )² * fr2
 = 15.0000² * 0.9225 + ( 0.0000 )² * 0.9225
 = 2.076 cm²
```

Area Available in the Hub Section [A6]:
```
 = ( 2 * min(Tlnp,ho,Hubht)) * (Hubtk - Thk) * fr2
 = ( 2 * min(95.0 ,268.0 ,95.0 )) * (50.0 - 11.0 ) * 0.923 )
 = 68.360 cm²
```

UG-45 Minimum Nozzle Neck Thickness Requirement: [Int. Press.]
= Max(Min(Max(Max(UG45B1,UG16B),Max(UG45B2,UG16B)),UG45B4), UG45A)
= Max(Min(Max(Max(34.2870,1.5875),Max(0.0000,1.5875)),6.2230),1.7484)
= 6.2230 < Minimum Nozzle Thickness 11.0000 mm OK

M.A.W.P. Results for this Nozzle (Based on Areas) at this Location
```
Approximate M.A.W.P. for given geometry                36.069  kgf/cm²
```

Note: The MAWP of this junction was limited by the shell.

Weld Size Calculations, Description: Noz 8A/B

```
Intermediate Calc. for nozzle/shell Welds   Tmin     19.0500  mm
```

Results Per UW-16.1:

	Required Thickness	Actual Thickness
Nozzle Weld	6.3500 = Min per Code	10.6050 = 0.7 * Wo mm

Weld Strength and Weld Loads per UG-41.1, Sketch (a) or (b)
Weld Load [W]:
```
 = (Ar-A1+2*(Thk-can)*Ffr1*(E1(T-Cas)-Tr))*S
 = (52.7149 - 0.0000 + 2 * ( 50.0000 - 0.0000 ) * 0.9225 *
   (1.00 * ( 38.0000 - 0.0000 ) - 34.2870 ) ) * 1504
 = 84466.82 kgf
```

Weld Load [W1]:
```
 = ((A2+A6)+A4-(Wi-Can/.707)²*Fr2)*S
 = ( 84.5767 + 2.0757 - 0.0000 * 0.92 ) * 1504
 = 130374.41 kgf
```

Weld Load [W2]:
```
 = ((A2+A6)+A3+A4+(2*(Thk-Can)*(T-Ca)*Fr1))*S
 = ( 84.5767 + 0.0000 + 2.0757 + 35.0565 ) * 1504
 = 183119.31 kgf
```

Weld Load [W3]:
```
 = ((A2+A6)+A3+A4+A5+(2*(Thk-Can)*(T-Ca)*Fr1))*S
 = ( 84.5767 + 0.0000 + 2.0757 + 0.0000 + 35.0565 ) * 1504
 = 183119.31 kgf
```

Strength of Connection Elements for Failure Path Analysis

Shear, Outward Nozzle Weld [Sonw]:
```
 = (pi/2) * Dlo * Wo * 0.49 * Snw
 = ( 3.1416 / 2.0 ) * 246.0000 * 15.0000 * 0.49 * 1388
 = 39422. kgf
```

Shear, Nozzle Wall [Snw]:
```
 = (pi *( Dlr + Dlo )/4 ) * ( Thk - Can ) * 0.7 * Sn
 = (3.1416 * 98.0000 ) * ( 50.0000 - 0.0000 ) * 0.7 * 1388
 = 149569. kgf
```

Tension, Nozzle Groove Weld [Tngw]:
```
 = (PI/2) * Dlo * (Wgnvi-Cas) * 0.74 * Sng
 = ( 3.1416 / 2.0 ) * 246.0000 * ( 38.0000 - 0.0000 ) * 0.74 * 1388
 = 150823. kgf
```

Strength of Failure Paths:

```
 PATH11 = ( SONW + SNW ) = ( 39422 + 149568 ) = 188990 kgf
```

```
PATH22 = ( Sonw + Tpgw + Tngw + Sinw )
       = ( 39422 + 0 + 150822 + 0 ) = 190244 kgf
PATH33 = ( Sonw + Tngw + Sinw )
       = ( 39422 + 150822 + 0 ) = 190244 kgf
```

Summary of Failure Path Calculations:

```
Path 1-1 = 188990 kgf, must exceed W = 84466 kgf or W1 = 130374 kgf
Path 2-2 = 190244 kgf, must exceed W = 84466 kgf or W2 = 183119 kgf
Path 3-3 = 190244 kgf, must exceed W = 84466 kgf or W3 = 183119 kgf
```

The Drop for this Nozzle is : 49.7031 mm
The Cut Length for this Nozzle is, Drop + Ho + H + T : 357.9687 mm

PV Elite 2007 ©1993-2007 by COADE Engineering Software

INPUT VALUES, Nozzle Description: Noz 9 From : 40

Pressure for Nozzle Reinforcement Calculations	P	32.595	kgf/cm²
Temperature for Internal Pressure	Temp	395	C
Shell Material		SA-387 11	
Shell Allowable Stress at Temperature	S	1504.57	kgf/cm²
Shell Allowable Stress At Ambient	Sa	1504.57	kgf/cm²
Inside Diameter of Cylindrical Shell	D	3107.0000	mm
Shell Actual Thickness	T	38.0000	mm
Shell Internal Corrosion Allowance	Cas	0.0000	mm
Shell External Corrosion Allowance	Caext	0.0000	mm
Distance from Bottom/Left Tangent		372.0000	cm
User Entered Minimum Design Metal Temperature		-18.00	C
Nozzle Material		SA-182 F11	
Nozzle Allowable Stress at Temperature	Sn	1388.03	kgf/cm²
Nozzle Allowable Stress At Ambient	Sna	1406.14	kgf/cm²
Nozzle Diameter Basis (for tr calc only)	Inbase	ID	
Layout Angle		45.00	deg
Nozzle Diameter	Dia	5.7480	in.
Nozzle Size and Thickness Basis	Idbn	Actual	
Actual Thickness of Nozzle	Thk	11.0000	mm
Nozzle Flange Material		SA-182 F11	
Nozzle Flange Type		Weld Neck Flange	
Hub Height of Integral Nozzle	h	95.0000	mm
Height of Beveled Transition	L`	39.0000	mm
Hub Thickness of Integral Nozzle (tn or x+tp)		50.0000	mm
Style of FVC Nozzle		Heavy Barrel	
Nozzle Corrosion Allowance	Can	0.0000	mm
Joint Efficiency of Shell Seam at Nozzle	Es	1.00	
Joint Efficiency of Nozzle Neck	En	1.00	
Nozzle Outside Projection	Ho	280.0000	mm
Weld leg size between Nozzle and Pad/Shell	Wo	15.0000	mm
Groove weld depth between Nozzle and Vessel	Wgnv	38.0000	mm
Nozzle Inside Projection	H	0.0000	mm
Weld leg size, Inside Nozzle to Shell	Wi	0.0000	mm
ASME Code Weld Type per UW-16		None	
Class of attached Flange		300	
Grade of attached Flange		GR 1.9	

The Pressure Design option was MAWP + static head (to the nozzle)

NOZZLE CALCULATION, Description: Noz 9

ASME Code, Section VIII, Division 1, 2004 A-06, UG-37 to UG-45

Actual Nozzle Inside Diameter Used in Calculation		5.748	in.
Actual Nozzle Thickness Used in Calculation		0.433	in.

Nozzle input data check completed without errors.

Reqd thk per UG-37(a)of Cylindrical Shell, Tr [Int. Press]
= (P*(D/2+CA))/(S*E-0.6*P) per UG-27 (c)(1)

```
 = (32.59*(3107.0000/2+0.0000))/(1504*1.00-0.6*32.59)
 = 34.0977 mm
```

Reqd thk per UG-37(a)of Nozzle Wall, Trn [Int. Press]

```
 = (P*(D/2+CA))/(S*E-0.6*P) per UG-27 (c)(1)
 = (32.59*(146.0000/2+0.0000))/(1388*1.00-0.6*32.59)
 = 1.7387 mm
```

UG-40, Thickness and Diameter Limit Results : [Int. Press]

Effective material diameter limit,	Dl	292.0000	mm
Effective material thickness limit, no pad	Tlnp	95.0000	mm

Results of Nozzle Reinforcement Area Calculations:

AREA AVAILABLE, A1 to A5		Design	External	Mapnc	
Area Required	Ar	52.424	NA	NA	cm²
Area in Shell	A1	0.000	NA	NA	cm²
Area in Nozzle Wall	A2	16.233	NA	NA	cm²
Area in Inward Nozzle	A3	0.000	NA	NA	cm²
Area in Welds	A4	2.076	NA	NA	cm²
Area in Pad	A5	0.000	NA	NA	cm²
Area in Hub	A6	68.360	NA	NA	cm²
TOTAL AREA AVAILABLE	Atot	86.670	NA	NA	cm²

The Internal Pressure Case Governs the Analysis.

Nozzle Angle Used in Area Calculations		90.00	Degs.

The area available without a pad is Sufficient.

Reinforcement Area Required for Nozzle [Ar]:

```
 = (Dlr*Tr+2*Thk*Tr*(1-fr1)) UG-37(c)
 = (146.0000*34.0977+2*(50.0000-0.0000)*34.0977*(1-0.9225))
 = 52.424 cm²
```

```
Area 1 has not been Calculated by User Request.
```

Area Available in Nozzle Wall, no Pad [A2np]:

```
 = ( 2 * min(Tlnp,ho) ) * ( Thk - Can - Trn ) * fr2
 = ( 2 * min(95.00 ,280.00 ) ) * ( 11.00 - 0.00 - 1.74 ) * 0.9225 )
 = 16.233 cm²
```

Area Available in Welds, no Pad [A4np]:

```
 = Wo² * fr2 + ( Wi-Can/0.707 )² * fr2
 = 15.0000² * 0.9225 + ( 0.0000 )² * 0.9225
 = 2.076 cm²
```

Area Available in the Hub Section [A6]:

```
 = ( 2 * min(Tlnp,ho,Hubht)) * (Hubtk - Thk) * fr2
 = ( 2 * min(95.0 ,280.0 ,95.0 )) * (50.0 - 11.0 ) * 0.923 )
 = 68.360 cm²
```

UG-45 Minimum Nozzle Neck Thickness Requirement: [Int. Press.]

= Max(Min(Max(Max(UG45B1,UG16B),Max(UG45B2,UG16B)),UG45B4), UG45A)
= Max(Min(Max(Max(34.0977,1.5875),Max(0.0000,1.5875)),6.2230),1.7387)
= 6.2230 < Minimum Nozzle Thickness 11.0000 mm OK

M.A.W.P. Results for this Nozzle (Based on Areas) at this Location

Approximate M.A.W.P. for given geometry	36.069	kgf/cm²

Note: The MAWP of this junction was limited by the shell.

Minimum Design Metal Temperature (Nozzle Neck), Curve: B

Minimum Temp. w/o impact per UCS-66	-26	C
Minimum Temp. at required thickness	-104	C

Nozzle MDMT Thickness Calc. per UCS-66 (a)1(b), MIN(tn,t,te), Curve: B
Minimum Temp. w/o impact per UCS-66 10 C
Minimum Temp. at required thickness -68 C

Weld Size Calculations, Description: Noz 9

Intermediate Calc. for nozzle/shell Welds Tmin 19.0500 mm

Results Per UW-16.1:

	Required Thickness	Actual Thickness
Nozzle Weld	6.3500 = Min per Code	10.6050 = 0.7 * Wo mm

Weld Strength and Weld Loads per UG-41.1, Sketch (a) or (b)

Weld Load [W]:
= (Ar-A1+2*(Thk-can)*Ffr1*(E1(T-Cas)-Tr))*S
= (52.4238 - 0.0000 + 2 * (50.0000 - 0.0000) * 0.9225 *
(1.00 * (38.0000 - 0.0000) - 34.0977)) * 1504
= 84291.59 kgf

Weld Load [W1]:
= ((A2+A6)+A4-(Wi-Can/.707)²*Fr2)*S
= (84.5939 + 2.0757 - 0.0000 * 0.92) * 1504
= 130400.29 kgf

Weld Load [W2]:
= ((A2+A6)+A3+A4+(2*(Thk-Can)*(T-Ca)*Fr1))*S
= (84.5939 + 0.0000 + 2.0757 + 35.0566) * 1504
= 183145.36 kgf

Weld Load [W3]:
= ((A2+A6)+A3+A4+A5+(2*(Thk-Can)*(T-Ca)*Fr1))*S
= (84.5939 + 0.0000 + 2.0757 + 0.0000 + 35.0566) * 1504
= 183145.36 kgf

Strength of Connection Elements for Failure Path Analysis

Shear, Outward Nozzle Weld [Sonw]:
= (pi/2) * Dlo * Wo * 0.49 * Snw
= (3.1416 / 2.0) * 246.0000 * 15.0000 * 0.49 * 1388
= 39422. kgf

Shear, Nozzle Wall [Snw]:
= (pi *(Dlr + Dlo)/4) * (Thk - Can) * 0.7 * Sn
= (3.1416 * 98.0000) * (50.0000 - 0.0000) * 0.7 * 1388
= 149569. kgf

Tension, Nozzle Groove Weld [Tngw]:
= (PI/2) * Dlo * (Wgnvi-Cas) * 0.74 * Sng
= (3.1416 / 2.0) * 246.0000 * (38.0000 - 0.0000) * 0.74 * 1388
= 150823. kgf

Strength of Failure Paths:

PATH11 = (SONW + SNW) = (39422 + 149569) = 188991 kgf
PATH22 = (Sonw + Tpgw + Tngw + Sinw)
= (39422 + 0 + 150823 + 0) = 190245 kgf
PATH33 = (Sonw + Tngw + Sinw)
= (39422 + 150823 + 0) = 190245 kgf

Summary of Failure Path Calculations:
Path 1-1 = 188991 kgf, must exceed W = 84291 kgf or W1 = 130400 kgf
Path 2-2 = 190245 kgf, must exceed W = 84291 kgf or W2 = 183145 kgf
Path 3-3 = 190245 kgf, must exceed W = 84291 kgf or W3 = 183145 kgf

The Drop for this Nozzle is : 4.8770 mm

The Cut Length for this Nozzle is, Drop + Ho + H + T : 322.8771 mm

Input Echo, WRC107 Item 1, Description: Noz 9 :

Diameter Basis for Vessel	Vbasis	ID	
Cylindrical or Spherical Vessel	Cylsph	Cylindrical	
Corrosion Allowance for Vessel	Cas	0.0000	mm
Vessel Diameter	Dv	3107.000	mm
Vessel Thickness	Tv	38.000	mm
Design Temperature		395.00	C
Vessel Material		SA-387 11	
Vessel Cold S.I. Allowable	Smc	1504.57	kgf/cm²
Vessel Hot S.I. Allowable	Smh	1504.57	kgf/cm²
Attachment Type	Type	Round	
Diameter Basis for Nozzle	Nbasis	ID	
Corrosion Allowance for Nozzle	Can	0.0000	mm
Nozzle Diameter	Dn	146.000	mm
Nozzle Thickness	Tn	50.000	mm
Nozzle Material		SA-182 F11	
Nozzle Cold S.I. Allowable	SNmc	1406.14	kgf/cm²
Nozzle Hot S.I. Allowable	SNmh	1388.03	kgf/cm²
Design Internal Pressure	Dp	32.595	kgf/cm²
Include Pressure Thrust		No	

External Forces and Moments in WRC 107 Convention:

Radial Load	(SUS)	P	544.0	kgf
Longitudinal Shear	(SUS)	Vl	454.0	kgf
Circumferential Shear	(SUS)	Vc	454.0	kgf
Circumferential Moment	(SUS)	Mc	305.0	kgf-m.
Longitudinal Moment	(SUS)	Ml	305.0	kgf-m.
Torsional Moment	(SUS)	Mt	254.0	kgf-m.

Compute Maximum Radial Force		No
Compute Maximum Circumferential Moment		No
Compute Maximum Longitudinal Moment		No
Use Interactive Control		No
WRC107 Version	Version	March 1979
Include Pressure Stress Indices per Div. 2		No
Compute Pressure Stress per WRC-368		No

WRC 107 Stress Calculation for SUStained loads:

Radial Load	P	544.0	kgf
Circumferential Shear	VC	454.0	kgf
Longitudinal Shear	VL	454.0	kgf
Circumferential Moment	MC	305.0	kgf-m.
Longitudinal Moment	ML	305.0	kgf-m.
Torsional Moment	MT	254.0	kgf-m.

Dimensionless Parameters used : Gamma = 41.38

Dimensionless Loads for Cylindrical Shells at Attachment Junction:

Curves read for 1979	Beta	Figure	Value	Location
N(PHI) / (P/Rm)	0.068	4C	7.584	(A,B)
N(PHI) / (P/Rm)	0.068	3C	7.159	(C,D)
M(PHI) / (P)	0.068	2C1	0.121	(A,B)

M(PHI) / (P)	0.068	1C	0.157	(C,D)
N(PHI) / (MC/(Rm**2 * Beta))	0.068	3A	0.862	(A,B,C,D)
M(PHI) / (MC/(Rm * Beta))	0.068	1A	0.102	(A,B,C,D)
N(PHI) / (ML/(Rm**2 * Beta))	0.068	3B	3.171	(A,B,C,D)
M(PHI) / (ML/(Rm * Beta))	0.068	1B	0.053	(A,B,C,D)
N(x) / (P/Rm)	0.068	3C	7.159	(A,B)
N(x) / (P/Rm)	0.068	4C	7.584	(C,D)
M(x) / (P)	0.068	1C1	0.161	(A,B)
M(x) / (P)	0.068	2C	0.121	(C,D)
N(x) / (MC/(Rm**2 * Beta))	0.068	4A	1.140	(A,B,C,D)
M(x) / (MC/(Rm * Beta))	0.068	2A	0.058	(A,B,C,D)
N(x) / (ML/(Rm**2 * Beta))	0.068	4B	0.856	(A,B,C,D)
M(x) / (ML/(Rm * Beta))	0.068	2B	0.087	(A,B,C,D)

Stress Concentration Factors Kn = 1.00, Kb = 1.00

Stresses in the Vessel at the Attachment Junction

Type of Stress	Load	Stress Values at (kgf/cm²) Au	Al	Bu	Bl	Cu	Cl	Du	Dl
Circ. Memb.	P	-6	-6	-6	-6	-6	-6	-6	-6
Circ. Bend.	P	-27	27	-27	27	-35	35	-35	35
Circ. Memb.	MC	0	0	0	0	-4	-4	4	4
Circ. Bend.	MC	0	0	0	0	-119	119	119	-119
Circ. Memb.	ML	-15	-15	15	15	0	0	0	0
Circ. Bend.	ML	-62	62	62	-62	0	0	0	0
Tot. Circ. Str.		-111.4	67.6	43.1	-26.8	-165.8	144.6	82.0	-86.8
Long. Memb.	P	-6	-6	-6	-6	-6	-6	-6	-6
Long. Bend.	P	-36	36	-36	36	-27	27	-27	27
Long. Memb.	MC	0	0	0	0	-5	-5	5	5
Long. Bend.	MC	0	0	0	0	-68	68	68	-68
Long. Memb.	ML	-4	-4	4	4	0	0	0	0
Long. Bend.	ML	-102	102	102	-102	0	0	0	0
Tot. Long. Str.		-149.5	128.3	63.5	-68.4	-108.4	83.7	40.0	-43.0
Shear	VC	3	3	-3	-3	0	0	0	0
Shear	VL	0	0	0	0	-3	-3	3	3
Shear	MT	7	7	7	7	7	7	7	7
Tot. Shear		10.1	10.1	3.9	3.9	3.9	3.9	10.1	10.1
Str. Int.		151.99	129.95	64.26	68.81	166.12	144.89	84.30	89.07

WRC 107 Stress Summations:

Vessel Stress Summation at Attachment Junction

Type of Stress Int. / Location	Stress Values at (kgf/cm²) Au	Al	Bu	Bl	Cu	Cl	Du	Dl
Circ. Pm (SUS)	1316	1349	1316	1349	1316	1349	1316	1349
Circ. Pl (SUS)	-21	-21	8	8	-10	-10	-2	-2
Circ. Q (SUS)	-89	89	34	-34	-155	155	84	-84

Long. Pm (SUS)	658	658	658	658	658	658	658	658
Long. Pl (SUS)	-10	-10	-2	-2	-12	-12	-1	-1
Long. Q (SUS)	-138	138	65	-65	-96	96	41	-41
Shear Pm (SUS)	0	0	0	0	0	0	0	0
Shear Pl (SUS)	3	3	-3	-3	-3	-3	3	3
Shear Q (SUS)	7	7	7	7	7	7	7	7
Pm (SUS)	1316	1349	1316	1349	1316	1349	1316	1349
Pm+Pl (SUS)	1294	1327	1324	1357	1305	1338	1314	1346
Pm+Pl+Q (Total)	1205	1416	1359	1322	1150	1493	1398	1262

Type of Stress Int.	Max. S.I. kgf/cm²	S.I. Allowable kgf/cm²	Result
Pm (SUS)	1349.01	1504.57	Passed
Pm+Pl (SUS)	1357.16	2256.85	Passed
Pm+Pl+Q (TOTAL)	1493.66	4513.71	Passed

PV Elite 2007 ©1993-2007 by COADE Engineering Software

INPUT VALUES, Nozzle Description: Noz 13 From : 40

Pressure for Nozzle Reinforcement Calculations	P	32.595	kgf/cm²
Temperature for Internal Pressure	Temp	395	C
Shell Material		SA-387 11	
Shell Allowable Stress at Temperature	S	1504.57	kgf/cm²
Shell Allowable Stress At Ambient	Sa	1504.57	kgf/cm²
Inside Diameter of Cylindrical Shell	D	3107.0000	mm
Shell Actual Thickness	T	38.0000	mm
Shell Internal Corrosion Allowance	Cas	0.0000	mm
Shell External Corrosion Allowance	Caext	0.0000	mm
Distance from Bottom/Left Tangent		351.5000	cm
User Entered Minimum Design Metal Temperature		-18.00	C
Nozzle Material		SA-182 F11	
Nozzle Allowable Stress at Temperature	Sn	1388.03	kgf/cm²
Nozzle Allowable Stress At Ambient	Sna	1406.14	kgf/cm²
Nozzle Diameter Basis (for tr calc only)	Inbase	ID	
Layout Angle		315.00	deg
Nozzle Diameter	Dia	18.5039	in.
Nozzle Size and Thickness Basis	Idbn	Actual	
Actual Thickness of Nozzle	Thk	19.0000	mm
Nozzle Flange Material		SA-182 F11	
Nozzle Flange Type		Weld Neck Flange	
Hub Height of Integral Nozzle	h	95.0000	mm
Height of Beveled Transition	L`	96.0000	mm
Hub Thickness of Integral Nozzle (tn or x+tp)		115.0000	mm
Style of FVC Nozzle		Heavy Barrel	
Nozzle Corrosion Allowance	Can	0.0000	mm
Joint Efficiency of Shell Seam at Nozzle	Es	1.00	
Joint Efficiency of Nozzle Neck	En	1.00	
Nozzle Outside Projection	Ho	313.0000	mm
Weld leg size between Nozzle and Pad/Shell	Wo	20.0000	mm
Groove weld depth between Nozzle and Vessel	Wgnv	38.0000	mm
Nozzle Inside Projection	H	0.0000	mm
Weld leg size, Inside Nozzle to Shell	Wi	0.0000	mm
ASME Code Weld Type per UW-16		None	
This is a Manway or Access Opening.			
Class of attached Flange		300	
Grade of attached Flange		GR 1.9	

The Pressure Design option was MAWP + static head (to the nozzle)

NOZZLE CALCULATION, Description: Noz 13

ASME Code, Section VIII, Division 1, 2004 A-06, UG-37 to UG-45

Actual Nozzle Inside Diameter Used in Calculation		18.504	in.
Actual Nozzle Thickness Used in Calculation		0.748	in.

Nozzle input data check completed without errors.

Reqd thk per UG-37(a)of Cylindrical Shell, Tr [Int. Press]

```
 = (P*(D/2+CA))/(S*E-0.6*P) per UG-27 (c)(1)
 = (32.59*(3107.0000/2+0.0000))/(1504*1.00-0.6*32.59)
 = 34.0977 mm
```

Reqd thk per UG-37(a)of Nozzle Wall, Trn [Int. Press]

```
 = (P*(D/2+CA))/(S*E-0.6*P) per UG-27 (c)(1)
 = (32.59*(469.9991/2+0.0000))/(1388*1.00-0.6*32.59)
 = 5.5973 mm
```

UG-40, Thickness and Diameter Limit Results : [Int. Press]

```
Effective material diameter limit,              Dl    939.9981  mm
Effective material thickness limit, no pad    Tlnp     95.0000  mm
```

Results of Nozzle Reinforcement Area Calculations:

AREA AVAILABLE, A1 to A5		Design	External	Mapnc	
Area Required	Ar	166.334	NA	NA	cm²
Area in Shell	A1	0.000	NA	NA	cm²
Area in Nozzle Wall	A2	23.493	NA	NA	cm²
Area in Inward Nozzle	A3	0.000	NA	NA	cm²
Area in Welds	A4	3.690	NA	NA	cm²
Area in Pad	A5	0.000	NA	NA	cm²
Area in Hub	A6	168.271	NA	NA	cm²
TOTAL AREA AVAILABLE	Atot	195.454	NA	NA	cm²

The Internal Pressure Case Governs the Analysis.

```
Nozzle Angle Used in Area Calculations                  90.00  Degs.
```

The area available without a pad is Sufficient.

Reinforcement Area Required for Nozzle [Ar]:

```
 = (Dlr*Tr+2*Thk*Tr*(1-fr1)) UG-37(c)
 = (469.9991*34.0977+2*(115.0000-0.0000)*34.0977*(1-0.9225))
 = 166.334 cm²
```

```
Area 1 has not been Calculated by User Request.
```

Area Available in Nozzle Wall, no Pad [A2np]:

```
 = ( 2 * min(Tlnp,ho) ) * ( Thk - Can - Trn ) * fr2
 = ( 2 * min(95.00 ,313.00 ) ) * ( 19.00 - 0.00 - 5.60 ) * 0.9225 )
 = 23.493 cm²
```

Area Available in Welds, no Pad [A4np]:

```
 = Wo² * fr2 + ( Wi-Can/0.707 )² * fr2
 = 20.0000² * 0.9225 + ( 0.0000 )² * 0.9225
 = 3.690 cm²
```

Area Available in the Hub Section [A6]:

```
 = ( 2 * min(Tlnp,ho,Hubht)) * (Hubtk - Thk) * fr2
 = ( 2 * min(95.0 ,313.0 ,95.0 )) * (115.0 - 19.0 ) * 0.923 )
 = 168.271 cm²
```

M.A.W.P. Results for this Nozzle (Based on Areas) at this Location

```
Approximate M.A.W.P. for given geometry                 36.069  kgf/cm²
```

Note: The MAWP of this junction was limited by the shell.

Minimum Design Metal Temperature (Nozzle Neck), Curve: B

```
Minimum Temp. w/o impact per UCS-66                      -9  C
Minimum Temp. at required thickness                     -87  C
```

Nozzle MDMT Thickness Calc. per UCS-66 (a)1(b), MIN(tn,t,te), Curve: B

```
Minimum Temp. w/o impact per UCS-66                      10  C
Minimum Temp. at required thickness                     -68  C
```

Weld Size Calculations, Description: Noz 13

```
Intermediate Calc. for nozzle/shell Welds   Tmin     19.0500  mm
```

Results Per UW-16.1:

```
                      Required Thickness    Actual Thickness
Nozzle Weld          6.3500 = Min per Code14.1400 = 0.7 * Wo mm
```

Weld Strength and Weld Loads per UG-41.1, Sketch (a) or (b)

Weld Load [W]:

```
 = (Ar-A1+2*(Thk-can)*Ffr1*(E1(T-Cas)-Tr))*S
 = (166.3338 - 0.0000 + 2 * ( 115.0000 - 0.0000 ) * 0.9225 *
   (1.00 * ( 38.0000 - 0.0000 ) - 34.0977 ) ) * 1504
 = 262718.25 kgf
```

Weld Load [W1]:

```
 = ((A2+A6)+A4-(Wi-Can/.707)²*Fr2)*S
 = ( 191.7640 + 3.6902 - 0.0000 * 0.92 ) * 1504
 = 294074.00 kgf
```

Weld Load [W2]:

```
 = ((A2+A6)+A3+A4+(2*(Thk-Can)*(T-Ca)*Fr1))*S
 = ( 191.7640 + 0.0000 + 3.6902 + 80.6300 ) * 1504
 = 415387.28 kgf
```

Weld Load [W3]:

```
 = ((A2+A6)+A3+A4+A5+(2*(Thk-Can)*(T-Ca)*Fr1))*S
 = ( 191.7640 + 0.0000 + 3.6902 + 0.0000 + 80.6300 ) * 1504
 = 415387.28 kgf
```

Strength of Connection Elements for Failure Path Analysis

Shear, Outward Nozzle Weld [Sonw]:

```
 = (pi/2) * Dlo * Wo * 0.49 * Snw
 = ( 3.1416 / 2.0 ) * 699.9991 * 20.0000 * 0.49 * 1388
 = 149569. kgf
```

Shear, Nozzle Wall [Snw]:

```
 = (pi *( Dlr + Dlo )/4 ) * ( Thk - Can ) * 0.7 * Sn
 = (3.1416 * 292.4995 ) * ( 115.0000 - 0.0000 ) * 0.7 * 1388
 = 1026758. kgf
```

Tension, Nozzle Groove Weld [Tngw]:

```
 = (PI/2) * Dlo * (Wgnvi-Cas) * 0.74 * Sng
 = ( 3.1416 / 2.0 ) * 699.9991 * ( 38.0000 - 0.0000 ) * 0.74 * 1388
 = 429170. kgf
```

Strength of Failure Paths:

```
PATH11 = ( SONW + SNW ) = ( 149568 + 1026757 ) = 1176326 kgf
PATH22 = ( Sonw + Tpgw + Tngw + Sinw )
       = ( 149568 + 0 + 429170 + 0 ) = 578738 kgf
PATH33 = ( Sonw + Tngw + Sinw )
       = ( 149568 + 429170 + 0 ) = 578738 kgf
```

Summary of Failure Path Calculations:

```
Path 1-1 = 1176326 kgf, must exceed W = 262718 kgf or W1 = 294073 kgf
Path 2-2 = 578738 kgf, must exceed W = 262718 kgf or W2 = 415387 kgf
Path 3-3 = 578738 kgf, must exceed W = 262718 kgf or W3 = 415387 kgf
```

The Drop for this Nozzle is : 39.9404 mm
The Cut Length for this Nozzle is, Drop + Ho + H + T : 390.9404 mm

PV Elite 2007 ©1993-2007 by COADE Engineering Software

INPUT VALUES, Nozzle Description: Noz 12 A/B From : 40

Pressure for Nozzle Reinforcement Calculations	P	32.595	kgf/cm²
Temperature for Internal Pressure	Temp	395	C
Shell Material		SA-387 11	
Shell Allowable Stress at Temperature	S	1504.57	kgf/cm²
Shell Allowable Stress At Ambient	Sa	1504.57	kgf/cm²
Inside Diameter of Cylindrical Shell	D	3107.0000	mm
Shell Actual Thickness	T	38.0000	mm
Shell Internal Corrosion Allowance	Cas	0.0000	mm
Shell External Corrosion Allowance	Caext	0.0000	mm
Distance from Bottom/Left Tangent		448.0000	cm
User Entered Minimum Design Metal Temperature		-18.00	C
Nozzle Material		SA-182 F11	
Nozzle Allowable Stress at Temperature	Sn	1388.03	kgf/cm²
Nozzle Allowable Stress At Ambient	Sna	1406.14	kgf/cm²
Nozzle Diameter Basis (for tr calc only)	Inbase	ID	
Layout Angle		0.00	deg
Nozzle Diameter	Dia	7.6378	in.
Nozzle Size and Thickness Basis	Idbn	Actual	
Actual Thickness of Nozzle	Thk	12.5000	mm
Nozzle Flange Material		SA-182 F11	
Nozzle Flange Type		Weld Neck Flange	
Hub Height of Integral Nozzle	h	95.0000	mm
Height of Beveled Transition	L`	52.0000	mm
Hub Thickness of Integral Nozzle (tn or x+tp)		65.0000	mm
Style of FVC Nozzle		Heavy Barrel	
Nozzle Corrosion Allowance	Can	0.0000	mm
Joint Efficiency of Shell Seam at Nozzle	Es	1.00	
Joint Efficiency of Nozzle Neck	En	1.00	
Nozzle Outside Projection	Ho	707.0000	mm
Weld leg size between Nozzle and Pad/Shell	Wo	20.0000	mm
Groove weld depth between Nozzle and Vessel	Wgnv	38.0000	mm
Nozzle Inside Projection	H	0.0000	mm
Weld leg size, Inside Nozzle to Shell	Wi	0.0000	mm
ASME Code Weld Type per UW-16		None	
User Defined Angle between Nozzle and Shell		45.0000	deg.
Class of attached Flange		300	
Grade of attached Flange		GR 1.9	

The Pressure Design option was MAWP + static head (to the nozzle)

NOZZLE CALCULATION, Description: Noz 12 A/B

ASME Code, Section VIII, Division 1, 2004 A-06, UG-37 to UG-45

Actual Nozzle Inside Diameter Used in Calculation		7.638	in.
Actual Nozzle Thickness Used in Calculation		0.492	in.

Nozzle input data check completed without errors.

Reqd thk per UG-37(a)of Cylindrical Shell, Tr [Int. Press]

= (P*(D/2+CA))/(S*E-0.6*P) per UG-27 (c)(1)
= (32.59*(3107.0000/2+0.0000))/(1504*1.00-0.6*32.59)
= 34.0977 mm

Reqd thk per UG-37(a)of Nozzle Wall, Trn [Int. Press]
= (P*(D/2+CA))/(S*E-0.6*P) per UG-27 (c)(1)
= (32.59*(194.0001/2+0.0000))/(1388*1.00-0.6*32.59)
= 2.3104 mm

UG-40, Thickness and Diameter Limit Results : [Int. Press]

Effective material diameter limit,	Dl	548.7152	mm
Effective material thickness limit, no pad	Tlnp	95.0000	mm

Results of Nozzle Reinforcement Area Calculations:

AREA AVAILABLE, A1 to A5		Design	External	Mapnc	
Area Required	Ar	96.983	NA	NA	cm²
Area in Shell	A1	0.000	NA	NA	cm²
Area in Nozzle Wall	A2	17.861	NA	NA	cm²
Area in Inward Nozzle	A3	0.000	NA	NA	cm²
Area in Welds	A4	3.690	NA	NA	cm²
Area in Pad	A5	0.000	NA	NA	cm²
Area in Hub	A6	92.023	NA	NA	cm²
TOTAL AREA AVAILABLE	Atot	113.574	NA	NA	cm²

The Internal Pressure Case Governs the Analysis.

Nozzle Angle Used in Area Calculations 45.00 Degs.

The area available without a pad is Sufficient.

Reinforcement Area Required for Nozzle [Ar]:
= (Dlr*Tr+2*Thk*Tr*(1-fr1)) UG-37(c)
= (274.3576*34.0977+2*(65.0000-0.0000)*34.0977*(1-0.9225))
= 96.983 cm²

Area 1 has not been Calculated by User Request.

Area Available in Nozzle Wall, no Pad [A2np]:
= (2 * min(Tlnp,ho)) * (Thk - Can - Trn) * fr2
= (2 * min(95.00 ,707.00)) * (12.50 - 0.00 - 2.31) * 0.9225)
= 17.861 cm²

Area Available in Welds, no Pad [A4np]:
= Wo² * fr2 + (Wi-Can/0.707)² * fr2
= 20.0000² * 0.9225 + (0.0000)² * 0.9225
= 3.690 cm²

Area Available in the Hub Section [A6]:
= (2 * min(Tlnp,ho,Hubht)) * (Hubtk - Thk) * fr2
= (2 * min(95.0 ,707.0 ,95.0)) * (65.0 - 12.5) * 0.923)
= 92.023 cm²

UG-45 Minimum Nozzle Neck Thickness Requirement: [Int. Press.]
= Max(Min(Max(Max(UG45B1,UG16B),Max(UG45B2,UG16B)),UG45B4), UG45A)
= Max(Min(Max(Max(34.0977,1.5875),Max(0.0000,1.5875)),7.1564),2.3104)
= 7.1564 < Minimum Nozzle Thickness 12.5000 mm OK

M.A.W.P. Results for this Nozzle (Based on Areas) at this Location
Approximate M.A.W.P. for given geometry 36.069 kgf/cm²

Note: The MAWP of this junction was limited by the shell.

Minimum Design Metal Temperature (Nozzle Neck), Curve: B

Minimum Temp. w/o impact per UCS-66	-22	C
Minimum Temp. at required thickness	-100	C

Nozzle MDMT Thickness Calc. per UCS-66 (a)1(b), MIN(tn,t,te), Curve: B
Minimum Temp. w/o impact per UCS-66 10 C
Minimum Temp. at required thickness -68 C

Weld Size Calculations, Description: Noz 12 A/B

Intermediate Calc. for nozzle/shell Welds Tmin 19.0500 mm

Results Per UW-16.1:

	Required Thickness	Actual Thickness
Nozzle Weld	6.3500 = Min per Code	14.1400 = 0.7 * Wo mm

Weld Strength and Weld Loads per UG-41.1, Sketch (a) or (b)

Weld Load [W]:
```
 = (Ar-A1+2*(Thk-can)*Ffr1*(E1(T-Cas)-Tr))*S
 = (96.9833 - 0.0000 + 2 * ( 65.0000 - 0.0000 ) * 0.9225 *
   (1.00 * ( 38.0000 - 0.0000 ) - 34.0977 ) ) * 1504
 = 152959.28 kgf
```

Weld Load [W1]:
```
 = ((A2+A6)+A4-(Wi-Can/.707)²*Fr2)*S
 = ( 109.8840 + 3.6902 - 0.0000 * 0.92 ) * 1504
 = 170880.06 kgf
```

Weld Load [W2]:
```
 = ((A2+A6)+A3+A4+(2*(Thk-Can)*(T-Ca)*Fr1))*S
 = ( 109.8840 + 0.0000 + 3.6902 + 45.5735 ) * 1504
 = 239448.44 kgf
```

Weld Load [W3]:
```
 = ((A2+A6)+A3+A4+A5+(2*(Thk-Can)*(T-Ca)*Fr1))*S
 = ( 109.8840 + 0.0000 + 3.6902 + 0.0000 + 45.5735 ) * 1504
 = 239448.44 kgf
```

Strength of Connection Elements for Failure Path Analysis

Shear, Outward Nozzle Weld [Sonw]:
```
 = (pi/2) * Dlo * Wo * 0.49 * Snw
 = ( 3.1416 / 2.0 ) * 458.2054 * 20.0000 * 0.49 * 1388
 = 97905. kgf
```

Shear, Nozzle Wall [Snw]:
```
 = (pi *( Dlr + Dlo )/4 ) * ( Thk - Can ) * 0.7 * Sn
 = (3.1416 * 183.1407 ) * ( 65.0000 - 0.0000 ) * 0.7 * 1388
 = 363365. kgf
```

Tension, Nozzle Groove Weld [Tngw]:
```
 = (PI/2) * Dlo * (Wgnvi-Cas) * 0.74 * Sng
 = ( 3.1416 / 2.0 ) * 458.2054 * ( 38.0000 - 0.0000 ) * 0.74 * 1388
 = 280926. kgf
```

Strength of Failure Paths:

```
PATH11 = ( SONW + SNW ) = ( 97904 + 363365 ) = 461269 kgf
PATH22 = ( Sonw + Tpgw + Tngw + Sinw )
       = ( 97904 + 0 + 280926 + 0 ) = 378830 kgf
PATH33 = ( Sonw + Tngw + Sinw )
       = ( 97904 + 280926 + 0 ) = 378830 kgf
```

Summary of Failure Path Calculations:
```
Path 1-1 = 461269 kgf, must exceed W = 152959 kgf or W1 = 170880 kgf
Path 2-2 = 378830 kgf, must exceed W = 152959 kgf or W2 = 239448 kgf
Path 3-3 = 378830 kgf, must exceed W = 152959 kgf or W3 = 239448 kgf
```

The Drop for this Nozzle is : 8.4698 mm
The Cut Length for this Nozzle is, Drop + Ho + H + T : 753.4698 mm

PV Elite 2007 ©1993-2007 by COADE Engineering Software

INPUT VALUES, Nozzle Description: Noz10 From : 50

Pressure for Nozzle Reinforcement Calculations	P	32.595	kgf/cm²
Temperature for Internal Pressure	Temp	395	C
Shell Material		SA-387 11	
Shell Allowable Stress at Temperature	S	1504.57	kgf/cm²
Shell Allowable Stress At Ambient	Sa	1504.57	kgf/cm²
Inside Diameter of Elliptical Head	D	3106.0000	mm
Aspect Ratio of Elliptical Head	Ar	2.00	
Head Actual Thickness	T	34.0000	mm
Head Internal Corrosion Allowance	Cas	0.0000	mm
Head External Corrosion Allowance	Caext	0.0000	mm
User Entered Minimum Design Metal Temperature		-18.00	C
Nozzle Material		SA-182 F11	
Nozzle Allowable Stress at Temperature	Sn	1388.03	kgf/cm²
Nozzle Allowable Stress At Ambient	Sna	1406.14	kgf/cm²
Nozzle Diameter Basis (for tr calc only)	Inbase	ID	
Layout Angle		0.00	deg
Nozzle Diameter	Dia	33.4646	in.
Nozzle Size and Thickness Basis	Idbn	Actual	
Actual Thickness of Nozzle	Thk	32.0000	mm
Nozzle Flange Material		SA-182 F11	
Nozzle Flange Type		Weld Neck Flange	
Hub Height of Integral Nozzle	h	94.0000	mm
Height of Beveled Transition	L`	168.0000	mm
Hub Thickness of Integral Nozzle (tn or x+tp)		200.0000	mm
Nozzle Corrosion Allowance	Can	0.0000	mm
Joint Efficiency of Shell Seam at Nozzle	Es	1.00	
Joint Efficiency of Nozzle Neck	En	1.00	
Nozzle Outside Projection	Ho	300.0000	mm
Weld leg size between Nozzle and Pad/Shell	Wo	9.5250	mm
Groove weld depth between Nozzle and Vessel	Wgnv	37.0000	mm
Nozzle Inside Projection	H	0.0000	mm
Weld leg size, Inside Nozzle to Shell	Wi	0.0000	mm
ASME Code Weld Type per UW-16		None	
This is a Manway or Access Opening.			
Class of attached Flange		300	
Grade of attached Flange		GR 1.9	

The Pressure Design option was MAWP + static head (to the nozzle)

NOZZLE CALCULATION, Description: Noz10

ASME Code, Section VIII, Division 1, 2004 A-06, UG-37 to UG-45

Actual Nozzle Inside Diameter Used in Calculation	33.465	in.
Actual Nozzle Thickness Used in Calculation	1.260	in.

Nozzle input data check completed without errors.

Reqd thk per UG-37(a)of Elliptical Head, Tr [Int. Press]
= (P*(K*(D+2*CA)))/(2*S*E-0.2*P) per UG-37(a)(3)
= (32.59*(0.90*(3106.0000+2*0.0000)))/(2 *1504*1.00-0.2*32.59)

= 30.3450 mm

Reqd thk per UG-37(a)of Nozzle Wall, Trn [Int. Press]
= (P*(D/2+CA))/(S*E-0.6*P) per UG-27 (c)(1)
= (32.59*(850.0008/2+0.0000))/(1388*1.00-0.6*32.59)
= 10.1228 mm

UG-40, Thickness and Diameter Limit Results : [Int. Press]

Effective material diameter limit,	Dl	1700.0016	mm
Effective material thickness limit, no pad	Tlnp	85.0000	mm

Results of Nozzle Reinforcement Area Calculations:

AREA AVAILABLE, A1 to A5		Design	External	Mapnc	
Area Required	Ar	267.335	NA	NA	cm²
Area in Shell	A1	0.000	NA	NA	cm²
Area in Nozzle Wall	A2	34.310	NA	NA	cm²
Area in Inward Nozzle	A3	0.000	NA	NA	cm²
Area in Welds	A4	0.837	NA	NA	cm²
Area in Pad	A5	0.000	NA	NA	cm²
Area in Hub	A6	263.477	NA	NA	cm²
TOTAL AREA AVAILABLE	Atot	298.625	NA	NA	cm²

The Internal Pressure Case Governs the Analysis.

Nozzle Angle Used in Area Calculations 90.00 Degs.

The area available without a pad is Sufficient.

Reinforcement Area Required for Nozzle [Ar]:
= (Dlr*Tr+2*Thk*Tr*(1-fr1)) UG-37(c)
= (850.0008*30.3450+2*(200.0000-0.0000)*30.3450*(1-0.9225))
= 267.335 cm²

Area 1 has not been Calculated by User Request.

Area Available in Nozzle Wall, no Pad [A2np]:
= (2 * min(Tlnp,ho)) * (Thk - Can - Trn) * fr2
= (2 * min(85.00 ,300.00)) * (32.00 - 0.00 - 10.12) * 0.9225)
= 34.310 cm²

Area Available in Welds, no Pad [A4np]:
= Wo² * fr2 + (Wi-Can/0.707)² * fr2
= 9.5250² * 0.9225 + (0.0000)² * 0.9225
= 0.837 cm²

Area Available in the Hub Section [A6]:
= (2 * min(Tlnp,ho,Hubht)) * (Hubtk - Thk) * fr2
= (2 * min(85.0 ,300.0 ,94.0)) * (200.0 - 32.0) * 0.923)
= 263.477 cm²

M.A.W.P. Results for this Nozzle (Based on Areas) at this Location
Approximate M.A.W.P. for given geometry 32.868 kgf/cm²

Note: The MAWP of this junction was limited by the shell.

Minimum Design Metal Temperature (Nozzle Neck), Curve: B

Minimum Temp. w/o impact per UCS-66	6	C
Minimum Temp. at required thickness	-72	C

Nozzle MDMT Thickness Calc. per UCS-66 (a)1(b), MIN(tn,t,te), Curve: B

Minimum Temp. w/o impact per UCS-66	7	C
Minimum Temp. at required thickness	-70	C

Weld Size Calculations, Description: Noz10

```
Intermediate Calc. for nozzle/shell Welds   Tmin     19.0500  mm
```

Results Per UW-16.1:

```
                      Required Thickness    Actual Thickness
Nozzle Weld          6.3500 = Min per Code 6.7342 = 0.7 * Wo mm
```

Weld Strength and Weld Loads per UG-41.1, Sketch (a) or (b)

Weld Load [W]:

```
 = (Ar-A1+2*(Thk-can)*Ffr1*(E1(T-Cas)-Tr))*S
 = (267.3353 - 0.0000 + 2 * ( 200.0000 - 0.0000 ) * 0.9225 *
   (1.00 * ( 34.0000 - 0.0000 ) - 30.3450 ) ) * 1504
 = 422516.66 kgf
```

Weld Load [W1]:

```
 = ((A2+A6)+A4-(Wi-Can/.707)²*Fr2)*S
 = ( 297.7880 + 0.8370 - 0.0000 * 0.92 ) * 1504
 = 449301.41 kgf
```

Weld Load [W2]:

```
 = ((A2+A6)+A3+A4+(2*(Thk-Can)*(T-Ca)*Fr1))*S
 = ( 297.7880 + 0.0000 + 0.8370 + 125.4655 ) * 1504
 = 638072.69 kgf
```

Weld Load [W3]:

```
 = ((A2+A6)+A3+A4+A5+(2*(Thk-Can)*(T-Ca)*Fr1))*S
 = ( 297.7880 + 0.0000 + 0.8370 + 0.0000 + 125.4655 ) * 1504
 = 638072.69 kgf
```

Strength of Connection Elements for Failure Path Analysis

Shear, Outward Nozzle Weld [Sonw]:

```
 = (pi/2) * Dlo * Wo * 0.49 * Snw
 = ( 3.1416 / 2.0 ) * 1250.0009 * 9.5250 * 0.49 * 1388
 = 127200. kgf
```

Shear, Nozzle Wall [Snw]:

```
 = (pi *( Dlr + Dlo )/4 ) * ( Thk - Can ) * 0.7 * Sn
 = (3.1416 * 525.0004 ) * ( 200.0000 - 0.0000 ) * 0.7 * 1388
 = 3205048. kgf
```

Tension, Nozzle Groove Weld [Tngw]:

```
 = (PI/2) * Dlo * (Wgnvi-Cas) * 0.74 * Sng
 = ( 3.1416 / 2.0 ) * 1250.0009 * ( 37.0000 - 0.0000 ) * 0.74 * 1388
 = 746209. kgf
```

Strength of Failure Paths:

```
 PATH11 = ( SONW + SNW ) = ( 127200 + 3205048 ) = 3332248 kgf
 PATH22 = ( Sonw + Tpgw + Tngw + Sinw )
        = ( 127200 + 0 + 746209 + 0 ) = 873409 kgf
 PATH33 = ( Sonw + Tngw + Sinw )
        = ( 127200 + 746209 + 0 ) = 873409 kgf
```

Summary of Failure Path Calculations:

```
Path 1-1 = 3332248 kgf, must exceed W = 422516 kgf or W1 = 449301 kgf
Path 2-2 = 873409 kgf, must exceed W = 422516 kgf or W2 = 638072 kgf
Path 3-3 = 873409 kgf, must exceed W = 422516 kgf or W3 = 638072 kgf
```

The Drop for this Nozzle is : 70.0657 mm
The Cut Length for this Nozzle is, Drop + Ho + H + T : 404.0657 mm

Input Echo, WRC107 Item 1, Description: Noz10 :

```
Diameter Basis for Vessel                Vbasis      ID
Cylindrical or Spherical Vessel          Cylsph      Spherical
```

Corrosion Allowance for Vessel	Cas	0.0000	mm
Vessel Diameter	Dv	5590.800	mm
Vessel Thickness	Tv	34.000	mm
Design Temperature		395.00	C
Vessel Material		SA-387 11	
Vessel Cold S.I. Allowable	Smc	1504.57	kgf/cm²
Vessel Hot S.I. Allowable	Smh	1504.57	kgf/cm²
Attachment Type	Type	Round	
WRC107 Attachment Classification	Holsol	Hollow	
Diameter Basis for Nozzle	Nbasis	ID	
Corrosion Allowance for Nozzle	Can	0.0000	mm
Nozzle Diameter	Dn	850.001	mm
Nozzle Thickness	Tn	200.000	mm
Nozzle Material		SA-182 F11	
Nozzle Cold S.I. Allowable	SNmc	1406.14	kgf/cm²
Nozzle Hot S.I. Allowable	SNmh	1388.03	kgf/cm²
Design Internal Pressure	Dp	32.595	kgf/cm²
Include Pressure Thrust		No	

External Forces and Moments in WRC 107 Convention:

Radial Load	(SUS)		P	1839.0	kgf
Longitudinal Shear	(SUS)	(Vl)	V1	1533.0	kgf
Circumferential Shear	(SUS)	(Vc)	V2	1533.0	kgf
Circumferential Moment	(SUS)	(Mc)	M1	1438.0	kgf-m.
Longitudinal Moment	(SUS)	(Ml)	M2	1438.0	kgf-m.
Torsional Moment	(SUS)		Mt	1198.0	kgf-m.

Compute Maximum Radial Force		No
Compute Maximum Circumferential Moment		No
Compute Maximum Longitudinal Moment		No
Use Interactive Control		No
WRC107 Version	Version	March 1979
Include Pressure Stress Indices per Div. 2		No
Compute Pressure Stress per WRC-368		No

WRC 107 Stress Calculation for SUStained loads:

Radial Load		P	1839.0	kgf
Circumferential Shear	(VC)	V2	1533.0	kgf
Longitudinal Shear	(VL)	V1	1533.0	kgf
Circumferential Moment	(MC)	M1	1438.0	kgf-m.
Longitudinal Moment	(ML)	M2	1438.0	kgf-m.
Torsional Moment		MT	1198.0	kgf-m.

Unitless Prm: U = 2.02 TAU = 5.00 (2.63) RHO = 0.25 (0.17)

Dimensionless Loads for Spherical Shells at Attachment Junction:

Curves read for 1979	Figure	Value	Location
N(x) * T / P	SP 1	0.01706	(A,B,C,D)
M(x) / P	SP 1	0.01562	(A,B,C,D)
N(x) * T * SQRT(Rm * T) / MC	SM 1	0.01441	(A,B,C,D)
M(x) * SQRT(Rm * T) / MC	SM 1	0.01675	(A,B,C,D)
N(x) * T * SQRT(Rm * T) / ML	SM 1	0.01441	(A,B,C,D)
M(x) * SQRT(Rm * T) / ML	SM 1	0.01675	(A,B,C,D)
N(y) * T / P	SP 1	0.02529	(A,B,C,D)

```
M(y)      / P                      SP 1    0.00515   (A,B,C,D)
N(y) * T * SQRT(Rm * T ) / MC      SM 1    0.01794   (A,B,C,D)
M(y)      * SQRT(Rm * T ) / MC     SM 1    0.00511   (A,B,C,D)
N(y) * T * SQRT(Rm * T ) / ML      SM 1    0.01794   (A,B,C,D)
M(y)      * SQRT(Rm * T ) / ML     SM 1    0.00511   (A,B,C,D)

Stress Concentration Factors Kn = 1.00,   Kb = 1.00
```

Stresses in the Vessel at the Attachment Junction

Type of	Stress Values at (kgf/cm²)							
Stress Load	Au	Al	Bu	Bl	Cu	Cl	Du	Dl
Rad. Memb. P	-2	-2	-2	-2	-2	-2	-2	-2
Rad. Bend. P	-14	14	-14	14	-14	14	-14	14
Rad. Memb. MC	0	0	0	0	-5	-5	5	5
Rad. Bend. MC	0	0	0	0	-40	40	40	-40
Rad. Memb. ML	-5	-5	5	5	0	0	0	0
Rad. Bend. ML	-40	40	40	-40	0	0	0	0
Tot. Rad. Str.	-63.9	46.8	28.6	-22.4	-63.9	46.8	28.6	-22.4
Tang. Memb. P	-4	-4	-4	-4	-4	-4	-4	-4
Tang. Bend. P	-4	4	-4	4	-4	4	-4	4
Tang. Memb. MC	0	0	0	0	-7	-7	7	7
Tang. Bend. MC	0	0	0	0	-12	12	12	-12
Tang. Memb. ML	-7	-7	7	7	0	0	0	0
Tang. Bend. ML	-12	12	12	-12	0	0	0	0
Tot. Tang. Str.	-28.5	6.0	10.6	-4.2	-28.5	6.0	10.6	-4.2
Shear VC	2	2	-2	-2	0	0	0	0
Shear VL	0	0	0	0	-2	-2	2	2
Shear MT	1	1	1	1	1	1	1	1
Tot. Shear	3.7	3.7	-0.9	-0.9	-0.9	-0.9	3.7	3.7
Str. Int.	64.25	47.17	28.65	22.48	63.88	46.85	29.35	23.17

WRC 107 Stress Summations:

Vessel Stress Summation at Attachment Junction

Type of Stress Int.	Stress Values at (kgf/cm²)							
Location	Au	Al	Bu	Bl	Cu	Cl	Du	Dl
Rad. Pm (SUS)	1340	1340	1340	1340	1340	1340	1340	1340
Rad. Pl (SUS)	-8	-8	3	3	-8	-8	3	3
Rad. Q (SUS)	-55	55	25	-25	-55	55	25	-25
Long. Pm (SUS)	1340	1340	1340	1340	1340	1340	1340	1340
Long. Pl (SUS)	-11	-11	3	3	-11	-11	3	3
Long. Q (SUS)	-17	17	7	-7	-17	17	7	-7
Shear Pm (SUS)	0	0	0	0	0	0	0	0
Shear Pl (SUS)	2	2	-2	-2	-2	-2	2	2
Shear Q (SUS)	1	1	1	1	1	1	1	1
Pm (SUS)	1340	1340	1340	1340	1340	1340	1340	1340

Pm+Pl (SUS)	1332	1332	1345	1345	1332	1332	1345	1345
Pm+Pl+Q (Total)	1311	1387	1368	1335	1311	1386	1369	1336

Type of Stress Int.	Max. S.I. kgf/cm²	S.I. Allowable kgf/cm²	Result
Pm (SUS)	1340.05	1504.57	Passed
Pm+Pl (SUS)	1345.49	2256.85	Passed
Pm+Pl+Q (TOTAL)	1387.22	4513.71	Passed

PV Elite 2007 ©1993-2007 by COADE Engineering Software

INPUT VALUES, Nozzle Description: Noz 1 From : 70

Pressure for Nozzle Reinforcement Calculations	P	32.595	kgf/cm²
Temperature for Internal Pressure	Temp	395	C
Shell Material		SA-182 F11	
Shell Allowable Stress at Temperature	S	1388.03	kgf/cm²
Shell Allowable Stress At Ambient	Sa	1406.14	kgf/cm²
Outside Diameter of Bolted Blind Flange	D	1171.4500	mm
Head Actual Thickness	T	110.0000	mm
Head Internal Corrosion Allowance	Cas	0.0000	mm
Head External Corrosion Allowance	Caext	0.0000	mm
User Entered Minimum Design Metal Temperature		-18.00	C
Nozzle Material		SA-182 F11	
Nozzle Allowable Stress at Temperature	Sn	1388.03	kgf/cm²
Nozzle Allowable Stress At Ambient	Sna	1406.14	kgf/cm²
Nozzle Diameter Basis (for tr calc only)	Inbase	ID	
Layout Angle		270.00	deg
Nozzle Diameter	Dia	11.7717	in.
Nozzle Size and Thickness Basis	Idbn	Actual	
Actual Thickness of Nozzle	Thk	12.5000	mm
Nozzle Flange Material		SA-182 F11	
Nozzle Flange Type		Weld Neck Flange	
Hub Height of Integral Nozzle	h	100.0000	mm
Height of Beveled Transition	L`	56.0000	mm
Hub Thickness of Integral Nozzle (tn or x+tp)		68.5000	mm
Nozzle Corrosion Allowance	Can	0.0000	mm
Joint Efficiency of Shell Seam at Nozzle	Es	1.00	
Joint Efficiency of Nozzle Neck	En	1.00	
Nozzle Outside Projection	Ho	196.0000	mm
Weld leg size between Nozzle and Pad/Shell	Wo	15.0000	mm
Groove weld depth between Nozzle and Vessel	Wgnv	110.0000	mm
Nozzle Inside Projection	H	0.0000	mm
Weld leg size, Inside Nozzle to Shell	Wi	0.0000	mm
ASME Code Weld Type per UW-16		None	
Class of attached Flange		300	
Grade of attached Flange		GR 1.9	

The Pressure Design option was MAWP + static head (to the nozzle)

NOZZLE CALCULATION, Description: Noz 1

ASME Code, Section VIII, Division 1, 2004 A-06, UG-37 to UG-45

Actual Nozzle Inside Diameter Used in Calculation		11.772	in.
Actual Nozzle Thickness Used in Calculation		0.492	in.

Nozzle input data check completed without errors.

Reqd thk per UG-37(a)of Nozzle Wall, Trn [Int. Press]
= (P*(D/2+CA))/(S*E-0.6*P) per UG-27 (c)(1)
= (32.59*(299.0012/2+0.0000))/(1388*1.00-0.6*32.59)
= 3.5608 mm

UG-40, Thickness and Diameter Limit Results : [Int. Press]

```
Effective material diameter limit,              Dl    598.0023  mm
Effective material thickness limit, no pad    Tlnp    128.2449  mm
```

Note: Hub Height was < 2.5 times Hub Thickness, using sketch UG-40 (e-1).

Results of Nozzle Reinforcement Area Calculations:

AREA AVAILABLE, A1 to A5		Design	External	Mapnc	
Area Required	Ar	129.065	NA	NA	cm²
Area in Shell	A1	0.000	NA	NA	cm²
Area in Nozzle Wall	A2	22.928	NA	NA	cm²
Area in Inward Nozzle	A3	0.000	NA	NA	cm²
Area in Welds	A4	2.250	NA	NA	cm²
Area in Pad	A5	0.000	NA	NA	cm²
Area in Hub + Bevel	A6	135.656	NA	NA	cm²
TOTAL AREA AVAILABLE	Atot	160.834	NA	NA	cm²

The Internal Pressure Case Governs the Analysis.

```
Nozzle Angle Used in Area Calculations                  90.00  Degs.
```

The area available without a pad is Sufficient.

Reinforcement Area Required for Nozzle [Ar]:

```
 = 0.5 * (DLR*Tr+2*Thk*Tr*(1-fr1)) per UG-37(d) or UG-39
 = 0.5*(299.0012*86.3307+2*(68.5000-0.0000)*86.3307*(1-1.0000))
 = 129.065 cm²
```

```
Area 1 has not been Calculated by User Request.
```

Area Available in Nozzle Wall, no Pad [A2np]:

```
 = ( 2 * min(Tlnp,ho) ) * ( Thk - Can - Trn ) * fr2
 = ( 2 * min(128.24 ,196.00 ) ) * ( 12.50 - 0.00 - 3.56 ) * 1.0000 )
 = 22.928 cm²
```

Area Available in Welds, no Pad [A4np]:

```
 = Wo² * fr2 + ( Wi-Can/0.707 )² * fr2
 = 15.0000² * 1.0000 + ( 0.0000 )² * 1.0000
 = 2.250 cm²
```

Area Available in the Hub Section [A6]:

```
 = ( 2 * min(Tlnp,ho,Hubht)) * (Hubtk - Thk) * fr2
 = ( 2 * min(128.2 ,196.0 ,100.0 )) * (68.5 - 12.5 ) * 1.000 )
 =  135.656 cm² Includes Bevel Area of 23.657 cm²
```

UG-45 Minimum Nozzle Neck Thickness Requirement: [Int. Press.]

= Max(Min(Max(Max(UG45B1,UG16B),Max(UG45B2,UG16B)),UG45B4), UG45A)
= Max(Min(Max(Max(86.3307,1.5875),Max(0.0000,1.5875)),8.3344),3.5608)
= 8.3344 < Minimum Nozzle Thickness 12.5000 mm OK

M.A.W.P. Results for this Nozzle (Based on Areas) at this Location

```
Approximate M.A.W.P. for given geometry                41.682  kgf/cm²
```

Minimum Design Metal Temperature (Nozzle Neck), Curve: B

```
Minimum Temp. w/o impact per UCS-66                    -22  C
Minimum Temp. at required thickness                   -100  C
```

Nozzle MDMT Thickness Calc. per UCS-66 (a)1(b), MIN(tn,t,te), Curve: B

```
Minimum Temp. w/o impact per UCS-66                     24  C
Minimum Temp. at required thickness                    -54  C
```

Weld Size Calculations, Description: Noz 1

```
Intermediate Calc. for nozzle/shell Welds   Tmin     19.0500  mm
```

Results Per UW-16.1:

	Required Thickness	Actual Thickness
Nozzle Weld	6.3500 = Min per Code	10.6050 = 0.7 * Wo mm

Weld Strength and Weld Loads per UG-41.1, Sketch (a) or (b)

Weld Load [W]:
```
 = (Ar-A1+2*(Thk-can)*Ffr1*(E1(T-Cas)-Tr))*S
 = (129.0651 - 0.0000 + 2 * ( 68.5000 - 0.0000 ) * 1.0000 *
   (1.00 * ( 110.0000 - 0.0000 ) - 86.3307 ) ) * 1388
 = 224155.12 kgf
```

Weld Load [W1]:
```
 = ((A2+A6)+A4-(Wi-Can/.707)²*Fr2)*S
 = ( 158.5842 + 2.2500 - 0.0000 * 1.00 ) * 1388
 = 223242.27 kgf
```

Weld Load [W2]:
```
 = ((A2+A6)+A3+A4+(2*(Thk-Can)*(T-Ca)*Fr1))*S
 = ( 158.5842 + 0.0000 + 2.2500 + 150.6997 ) * 1388
 = 432417.47 kgf
```

Weld Load [W3]:
```
 = ((A2+A6)+A3+A4+A5+(2*(Thk-Can)*(T-Ca)*Fr1))*S
 = ( 158.5842 + 0.0000 + 2.2500 + 0.0000 + 150.6997 ) * 1388
 = 432417.47 kgf
```

Strength of Connection Elements for Failure Path Analysis

Shear, Outward Nozzle Weld [Sonw]:
```
 = (pi/2) * Dlo * Wo * 0.49 * Snw
 = ( 3.1416 / 2.0 ) * 436.0012 * 15.0000 * 0.49 * 1388
 = 69870. kgf
```

Shear, Nozzle Wall [Snw]:
```
 = (pi *( Dlr + Dlo )/4 ) * ( Thk - Can ) * 0.7 * Sn
 = (3.1416 * 183.7506 ) * ( 68.5000 - 0.0000 ) * 0.7 * 1388
 = 384206. kgf
```

Tension, Nozzle Groove Weld [Tngw]:
```
 = (PI/2) * Dlo * (Wgnvi-Cas) * 0.74 * Sng
 = ( 3.1416 / 2.0 ) * 436.0012 * ( 110.0000 - 0.0000 ) * 0.74 * 1388
 = 773800. kgf
```

Strength of Failure Paths:

```
PATH11 = ( SONW + SNW ) = ( 69870 + 384206 ) = 454076 kgf
PATH22 = ( Sonw + Tpgw + Tngw + Sinw )
       = ( 69870 + 0 + 773800 + 0 ) = 843670 kgf
PATH33 = ( Sonw + Tngw + Sinw )
       = ( 69870 + 773800 + 0 ) = 843670 kgf
```

Summary of Failure Path Calculations:
```
Path 1-1 = 454076 kgf, must exceed W = 224155 kgf or W1 = 223242 kgf
Path 2-2 = 843670 kgf, must exceed W = 224155 kgf or W2 = 432417 kgf
Path 3-3 = 843670 kgf, must exceed W = 224155 kgf or W3 = 432417 kgf
```

The Cut Length for this Nozzle is, Drop + Ho + H + T : 306.0508 mm

PV Elite 2007 ©1993-2007 by COADE Engineering Software

Nozzle Schedule:

Description	Nominal Size in.	Flange Sch/Type Cls		Noz. O/Dia mm	Wall Thk mm	ODia mm	Re-Pad Thick mm	Cut Length mm
Noz 8A/B	9.685	300	WNF	168.000	11.000	-	-	357.97
Noz 9	9.685	300	WNF	168.000	11.000	-	-	322.88
Noz 11 A/B	11.969	300	WNF	219.000	12.500	-	-	1708.36
Noz 12 A/B	12.756	300	WNF	219.000	12.500	-	-	753.47
Noz 1	17.165	300	WNF	324.001	12.500	-	-	306.05
Noz 2	19.291	300	WNF	356.000	13.000	-	-	255.65
Noz 13	27.559	300	WNF	508.000	19.000	-	-	390.94
Noz10	49.213	300	WNF	914.001	32.000	-	-	404.07

Note on the Cut Length Calculation:
The Cut Length is the Outside Projection + Inside Projection + Drop + In Plane Shell Thickness. This value does not include weld gaps, nor does it account for shrinkage.

Please Note: In the case of Oblique Nozzles, the Outside Diameter must be increased. The Re-Pad WIDTH around the nozzle is calculated as follows: Width of Pad = (Pad Outside Dia. (per above) - Nozzle Outside Dia.)/2

Nozzle Material and Weld Fillet Leg Size Details:

Nozzle	Material	Shl Grve Weld mm	Noz Shl/Pad Weld mm	Pad OD Weld mm	Pad Grve Weld mm	Inside Weld mm
Noz 8A/	SA-182 F11	38.000	15.000	-	-	-
Noz 9	SA-182 F11	38.000	15.000	-	-	-
Noz 11	SA-182 F11	34.000	15.000	-	-	-
Noz 12	SA-182 F11	38.000	20.000	-	-	-
Noz 1	SA-182 F11	110.000	15.000	-	-	-
Noz 2	SA-182 F11	34.000	15.000	-	-	-
Noz 13	SA-182 F11	38.000	20.000	-	-	-
Noz10	SA-182 F11	37.000	9.525	-	-	-

Nozzle Miscellaneous Data:

Nozzle	Elevation/Distance From Datum cm	Layout Angle deg.	Projection Outside mm	Projection Inside mm	Installed In Component
Noz 8A/B	630.000	180.00	268.00	0.00	Cylinder
Noz 9	972.000	45.00	280.00	0.00	Cylinder
Noz 11 A/B	522.350	180.00	1611.00	0.00	Bot Head
Noz 12 A/B	1048.000	0.00	707.00	0.00	Cylinder
Noz 1	1315.860	270.00	196.00	0.00	Manway Cover
Noz 2	522.350	270.00	211.00	0.00	Bot Head
Noz 13	951.500	315.00	313.00	0.00	Cylinder
Noz10	1371.650	0.00	300.00	0.00	Top Head

PV Elite 2007 ©1993-2007 by COADE Engineering Software

Nozzle Calculation Summary

Description	Internal kgf/cm²	Ext	MAPNC kgf/cm²	UG45 [tr]	Weld Path	Areas
Noz 2	32.59	...	...	OK 8.33	OK	Passed
Noz 11 A/B	32.59	...	...	OK 7.16	OK	Passed
Noz 11 A/B	32.59	...	...	OK 7.16	OK	Passed
Noz 8A/B	36.07	...	...	OK 6.22	OK	Passed
Noz 8A/B	36.07	...	...	OK 6.22	OK	Passed
Noz 9	36.07	...	...	OK 6.22	OK	Passed
Noz 13	36.07	...	...	...	OK	Passed
Noz 12 A/B	36.07	...	...	OK 7.16	OK	Passed
Noz10	32.87	...	...	...	OK	Passed
Noz 1	41.68	...	...	OK 8.33	OK	Passed
Min. - Nozzles	32.59 Noz 11 A/B					
Min. Shell&Flgs	32.59 30 40		32.87			

Computed Vessel M.A.W.P. 32.59 kgf/cm²

Check the Spatial Relationship between the Nozzles

From Node	Nozzle Description	Y Coordinate,	Layout Angle,	Dia. Limit
30	Noz 2	0.000	270.000	508.000
30	Noz 11 A/B	0.000	180.000	388.000
40	Noz 8A/B	300.000	180.000	292.000
40	Noz 9	3720.000	45.000	292.000
40	Noz 13	3515.000	315.000	939.998
40	Noz 12 A/B	4480.000	0.000	548.715
50	Noz10	0.000	0.000	1700.002
70	Noz 1	0.000	270.000	598.002

The nozzle spacing is computed by the following:
= Sqrt(ll² + lc²) where
ll - Arc length along the inside vessel surface in the long. direction.
lc - Arc length along the inside vessel surface in the circ. direction

If any interferences/violations are found, they will be noted below.
No interference violations have been detected !

Checking Mulitple Nozzles on Flat Head per ASME Sec. VIII Div. 1 UG-39

Comparing Nozzles on Element: Manway Cover

Note: No Nozzle pairs found on this element.

UG-39 Nozzle Diameter and Distance to Edge Checks :

Nozzle Description	Nozzle dia. mm	Head Dia. /2 mm	Distance from Edge mm	Nozzle dia./4 mm
Noz 1	299.00	474.82	367.72	74.750

No Multiple Nozzle spacing violations have been detected !

PV Elite 2007 ©1993-2007 by COADE Engineering Software

PV Elite 2007 Licensee: OPENSO
FileName : K-2316004_R3_Metric ----------
Vessel Design Summary STEP: 29 Dec 21,2009

Design Code: ASME Code Section VIII Division 1, 2004 A-06

Diameter Spec : 3107.000 mm ID		
Vessel Design Length, Tangent to Tangent	698.00	cm
Distance of Bottom Tangent above Grade	600.00	cm
Distance of Base above Grade	0.00	cm
Specified Datum Line Distance	0.00	cm
Skirt Material	SA-387 11/SA-516-70	
Shell/Head Matl	SA-387 11	
Shell/Head Matl	SA-182 F11	
Internal Design Temperature	395	C
Internal Design Pressure	26.17	kgf/cm²
Maximum Allowable Working Pressure	32.59	kgf/cm²
External Max. Allowable Working Pressure	11.93	kgf/cm²
Hydrostatic Test Pressure	42.37	kgf/cm²
Required Minimum Design Metal Temperature	-18	C
Warmest Computed Minimum Design Metal Temperature	-40	C
Wind Design Code	NBR 6123	
Earthquake Design Code	No Seismic	

Element Pressures and MAWP: kgf/cm²

Element Desc	Internal	External	M.A.W.P	Corr. All.
Bot Head	26.443	0.000	32.595	0.0000
Cylinder	26.371	0.000	36.069	0.0000
Top Head	26.170	0.000	32.868	0.0000
Manway Flange	26.170	0.000	68.198	0.0000
Manway Cover	26.170	0.000	42.487	0.0000

Liquid Level: 310.65 cm Dens.: 879.606 kgm/m³ Sp. Gr.: 0.9

Element Type	"To" Elev cm	Length cm	Element Thk mm	R e q d Int.	T h k Ext.	Joint Eff Long	Circ
Skirt	500.0	500.0	16.0	No Calc	No Calc	1.00	1.00
Skirt	600.0	100.0	16.0	No Calc	No Calc	1.00	1.00
Ellipse	604.0	4.0	35.5	27.3	No Calc	1.00	1.00
Cylinder	1294.0	690.0	38.0	27.5	No Calc	1.00	1.00
Ellipse	1298.0	4.0	35.5	27.1	No Calc	1.00	1.00
Body Flg	1315.9	17.9	103.1	65.8	63.2	1.00	1.00
Body Flg	1326.9	11.0	110.0	86.3	61.9	1.00	1.00

Element thicknesses are shown as Nominal if specified, otherwise are Minimum

Wind/Earthquake Shear, Bending

From	To	Distance to Support cm	Cummulative Wind Shear kgf	Earthquake Shear kgf	Wind Bending kgf-m.	Earthquake Bending kgf-m.
10	20	250.000	3385.78	0.00000	23304.7	0.00000
20	30	550.000	2251.04	0.00000	9212.66	0.00000
30	40	602.000	1998.63	0.00000	7087.82	0.00000
40	50	949.000	1988.36	0.00000	7008.08	0.00000
50	60	1296.00	41.2543	0.00000	5.92094	0.00000
60	70	1306.93	29.2657	0.00000	4.51055	0.00000
70	80	1321.36	13.1472	0.00000	0.72310	0.00000

Abs Max of the all of the Stress Ratio's : 0.3922

Basering Data : Continuous Top Ring W/Gussets

Thickness of Basering	31.5000	mm
Inside Diameter of Basering	2700.0000	mm
Outside Diameter of Basering	3481.0000	mm
Nominal Diameter of Bolts	24.0000	mm
Diameter of Bolt Circle	3337.0002	mm
Number of Bolts	12	
Thickness of Gusset Plates	12.5000	mm
Average Width of Gusset Plates	160.0000	mm
Height of Gussets	224.0000	mm
Distance between Gussets	100.0000	mm
Thickness of Top Plate or Ring	31.5000	mm
Circumferential Width of the Top Plate	174.5000	mm
Radial Width of the Top Plate	160.0000	mm
Wind Moment on Support	23305.	kgf-m.
Wind Shear on Support	3386.	kgf

Note: Wind and Earthquake moments include the effects of user defined forces and moments if any exist in the job and were specified to act (compute loads and stresses) during these cases. Also included are moment effects due to eccentric weights if any are present in the input.

Weights:

Fabricated - Bare W/O Removable Internals	47681.5	kgm
Shop Test - Fabricated + Water (Full)	115277.9	kgm
Shipping - Fab. + Rem. Intls.+ Shipping App.	54338.0	kgm
Erected - Fab. + Rem. Intls.+ Insul. (etc)	61138.0	kgm
Empty - Fab. + Intls. + Details + Wghts.	61138.0	kgm
Operating - Empty + Operating Liquid (No CA)	101045.8	kgm
Field Test - Empty Weight + Water (Full)	121934.4	kgm

PV Elite 2007 ©1993-2007 by COADE Engineering Software

SKIRT OPENING REINFORCEMENT CALCULATIONS

OPENING D:

Input

Skirt thickness	: t --------- 16 mm
Opening I.D.	: D -------- 600 mm
Reinforcement Thickness	: tf -------- 25 mm
Reinforcement Width	: L -------- 210 mm

Results

1) Required Area
Ar = t * D = 9,600 mm^2

2) Available Area
Aa = 2*tf*L = 10,500 mm^2

The reinforcement is adequate

OPENING B1/2:

Input

Skirt thickness	: t --------- 16 mm
Opening I.D.	: D -------- 580 mm
Reinforcement Thickness	: tf -------- 12.5 mm
Reinforcement Width	: L -------- 464 mm

Results

1) Required Area
Ar = t * D = 9,280 mm^2

2) Available Area
Aa = 2*tf*L = 11,600 mm^2

The reinforcement is adequate

OPENING A:

Input

Skirt thickness	: t --------- 16 mm
Opening I.D.	: D -------- 610 mm
Reinforcement Thickness	: tf -------- 25 mm
Reinforcement Width	: L -------- 215 mm

Results

1) Required Area
Ar = t * D = 9,760 mm^2

2) Available Area
Aa = 2*tf*L = 10,750 mm^2

The reinforcement is adequate

OPENING C1-8:

Input

Skirt thickness	: t --------- 16 mm
Opening I.D.	: D -------- 102 mm
Reinforcement Thickness	: tf -------- 6 mm
Reinforcement Width	: L -------- 447 mm

Results

1) Required Area
Ar = t * D = 1,632 mm^2

2) Available Area
Aa = 2*tf*L (Sf/S) = 5,364 mm^2

The reinforcement is adequate

Thermal Expansion Calculation

Design Temperature ; T	395	°C
Ambient temperature ; Ta	20	°C
Vessel Material	SA-387-11CL2	
Thermal Expansion Coefficient ; α at Design Temperature	1.35E-05	mm/mm/°C
Tangent Line to tangent Line Distance	6980	mm

Thermal Expansion ; ΔL = Lα(T-Ta)	35.3	mm

Vessel Classification Per NR-13

Operating Press	19.9	kg/cm^2 G	=	1951	kPa
Vessel Capacity	60.48	m^3			
Service	Second Stage HDS Reactor				
Fluid	H2+H2S+HC+NH3				
Operating at Vacuum ?	No				

Per ANNEX III

P(kPa)xV(m^3) = 1951 X 60.48 = 117996.5 > 8

→ NR-13 Brazillian Standard Is Applicable

Per ANNEX IV(1.1) **FLUID CLASS:A**

Per ANNEX IV(1.2) **POTENTIAL RISK GROUP : 1**

P(MPa)xV(m^3) = 1.951 X 60.48 = 118.00 >= 100

Per ANNEX IV(1.3) **VESSEL CATEGORY : I**

Information to be Indicated in the Drawings and Nameplate:

Class A, Group 1, Category I

Lifting Cover and Tailing Lug Calculations

Lifting Cover: (same Lifting Cover as K-2316003; Sheet 85)

Dimensions: Blind Flange: ØN.36" ASME B16.47 Series B 300#
Material SA-516-70 plate, 75mm thick
Lifting Lug: SA-516-70 75mm x 544 tall x 550 wide
Radius of Lug at Top = 180mm

Drawing Notes:

1) Use 85 Ton Shackle Model G-4163 Green Pin "GUNNEBO" (pin diameter = 83 mm) or equal.
2) Shackle pin hole Ø86mm to be drilled or cut and ground smooth
3) Use (2) 260 mm OD x 92 mm ID x 19 mm thick washers at the shackle pin hole
4) Grind all burned edges and sharp corners of lug plate including edges of shackle hole.
5) 1/16" chamfer all plate edges and edges of shackle hole.
6) U.T. lug plate before welding
7) M.T. bottom surface of lug plate
8) P.W.H.T. is required
9) Impact test material at -12º C (+10 °F)
10) Lifting lugs are not to be used to tie down vessel during shipment.
11) CAUTION: Future use of the lifting device after vessel is placed in service will require that the lifting device, the attachment welds and the vessel be inspected and evaluated before use.

Design Notes:

1) **Estimated erection weight is 54.4 metric tons (119.7 Kips). This is the empty weight of the vessel excluding the fireproofing and removable internals (see shipping weight in sheet 80 – This weight does not include fireproofing weight and was used in lifting calculations).**
2) Design is based on 150% Impact.

Tailing Lug:

Drawing: DE-5275.00-2316-570-BAR-305 Rev 0 (see sketches Sheet 86 & 87)

Drawing Notes:

1) Use 55 Ton Shackle Model G-4163 Green Pin "GUNNEBO" (pin diameter = 70 mm) or equal.
2) Use (2) 145 mm OD x 79 mm ID x 28 mm thick washers at the shackle pin hole
3) Shackle pin hole Ø73mm to be drilled or cut and ground smooth
4) Grind all burned edges along lug radius and 1" below shackle hole centerline
5) 1/16" chamfer all plate edges

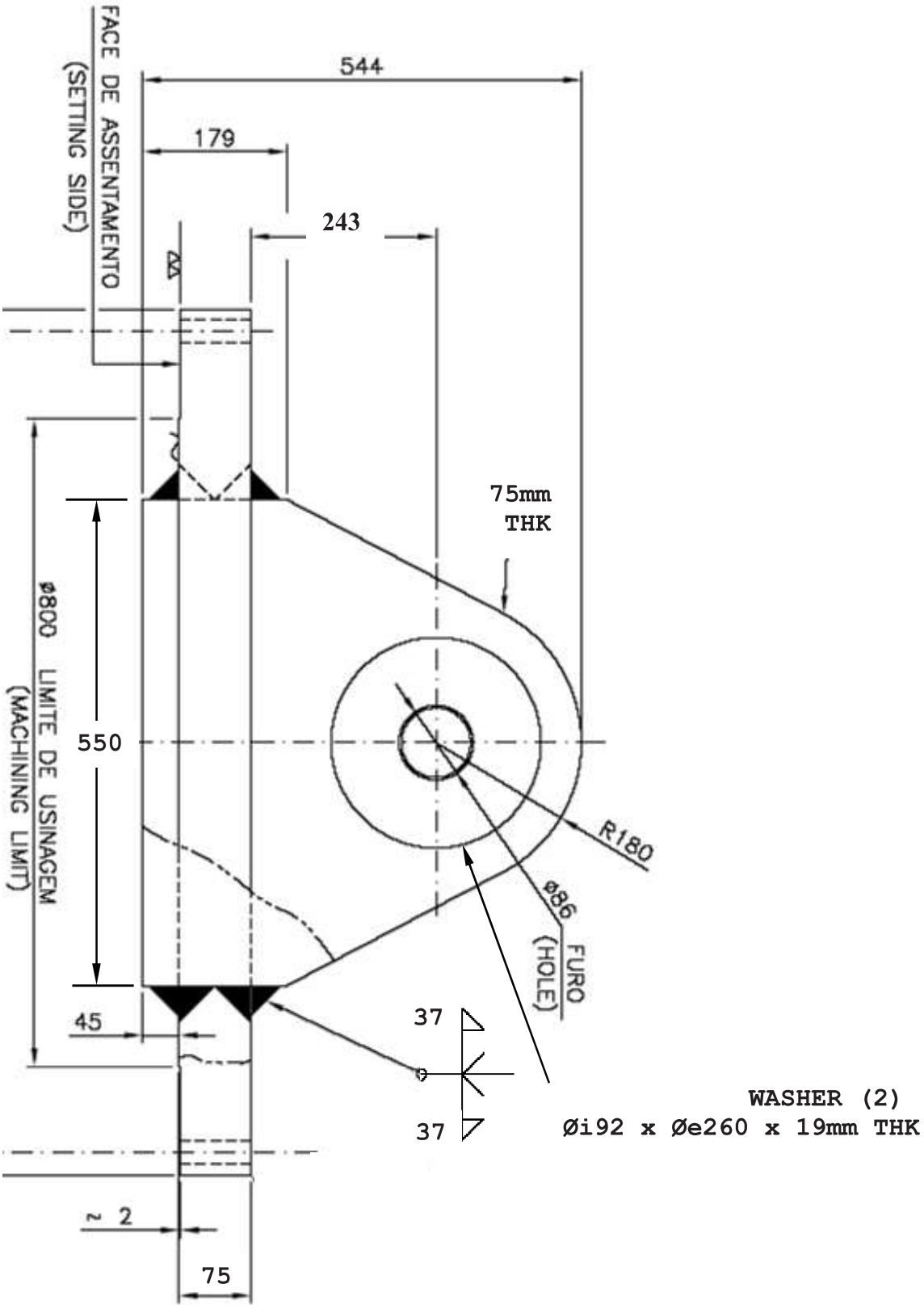
FACE DE ASSENTAMENTO
(SETTING SIDE)
544
179
243
75mm
THK
ø800 LIMITE DE USINAGEM
(MACHINING LIMIT)
550
R180
ø86 FURO
(HOLE)
45
37
37
WASHER (2)
Øi92 x Øe260 x 19mm THK
2
75

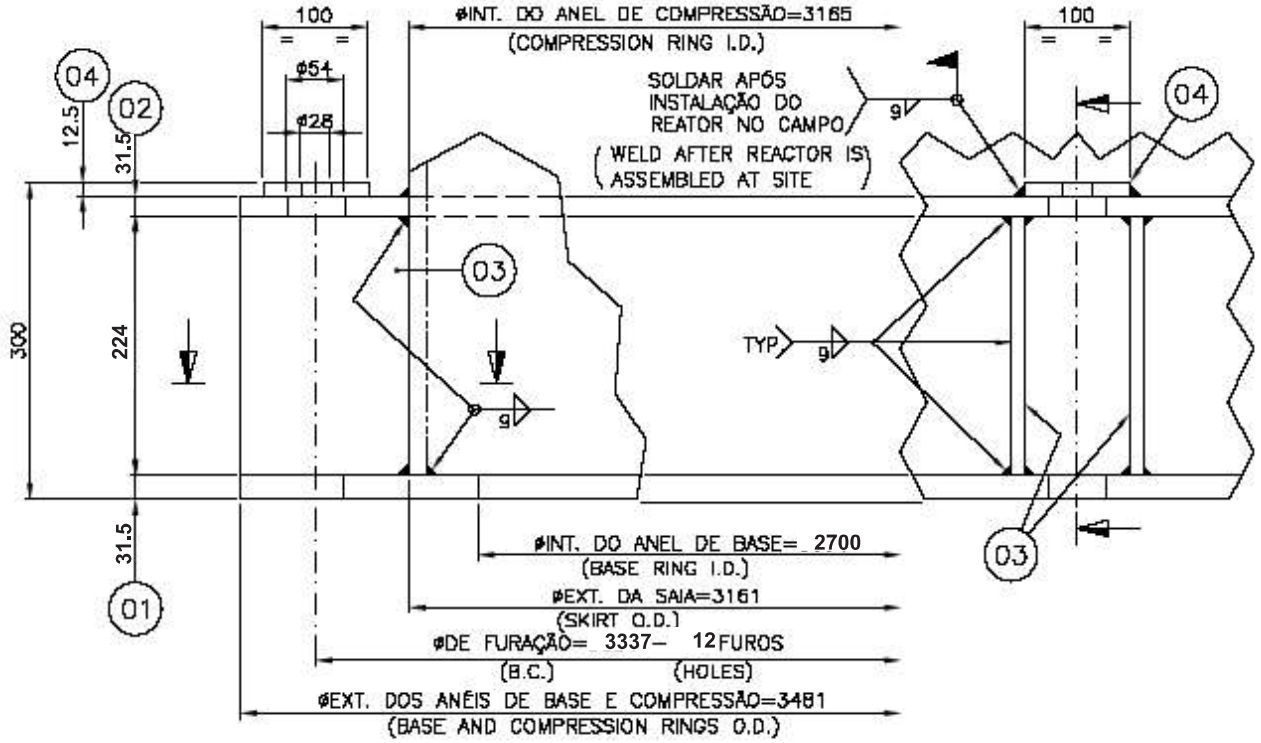

BASE DA SAIA (SKIRT BASE) BL01

ESC.1:5

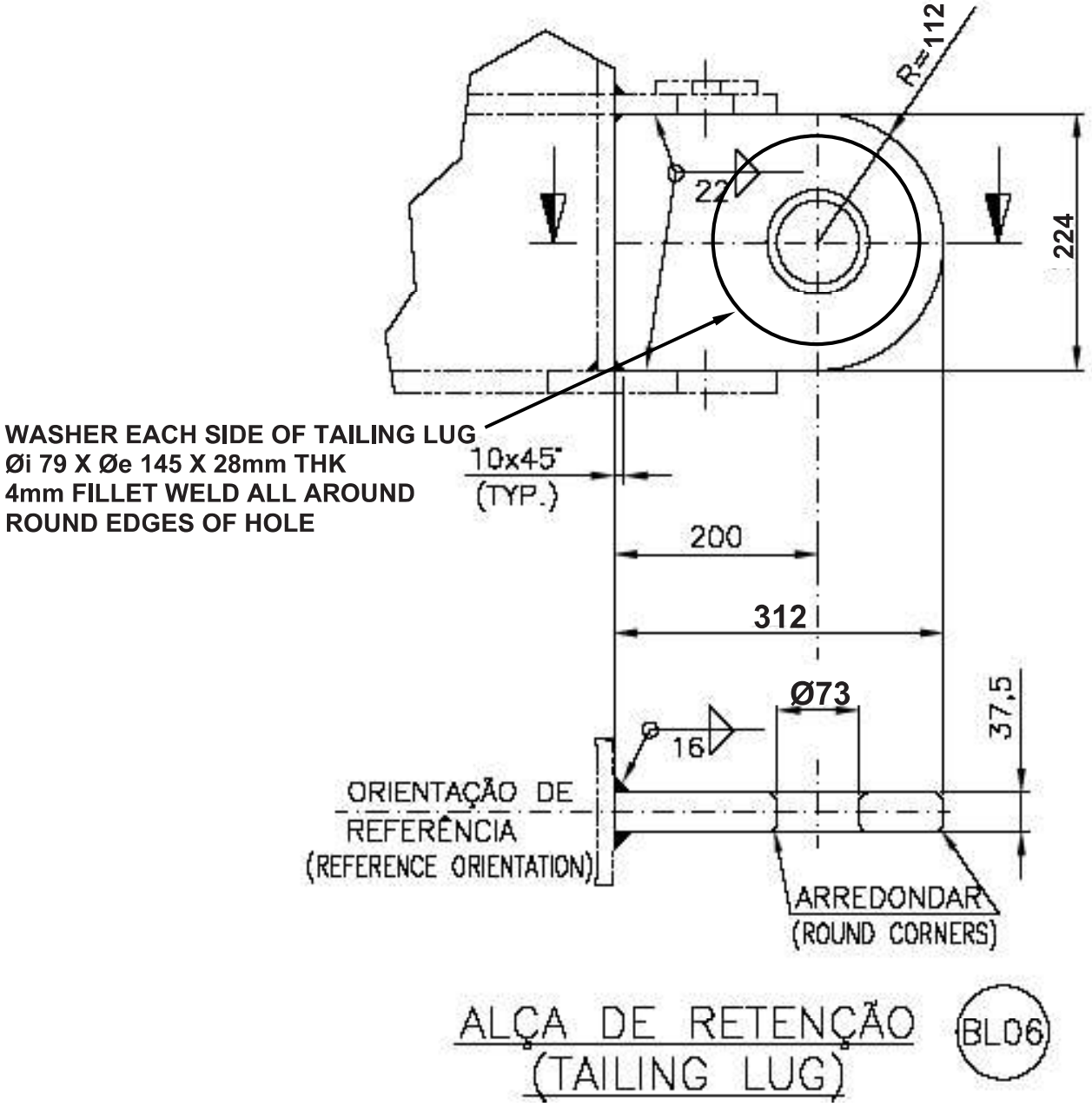

TAILING LUG MATERIAL: SA-36

Lifting Procedure (horizontal to vertical)

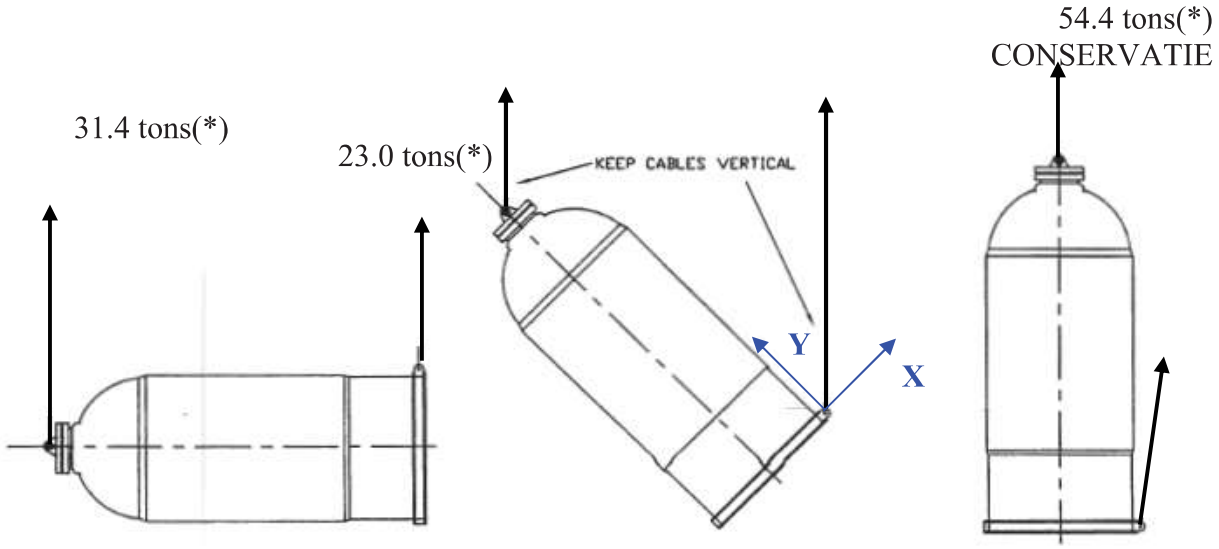

(*): Metric tons

Notes:

1. The loads shown are approximate calculated weights and do not include rigging. This weight includes vessel and initially installed internals but does not include removable internals such as support beams and trays or external attachment such as piping, and etc.
2. The vessel shall not be lifted at temperature colder than -12º C (+10 °F)
3. Use 85 Tons shackle (Green Pin G-4263 or equal) at lifting lug.
4. Use 55 Tons shackle (Green Pin G-4163 or equal) at tailing lug.
5. CAUTION: Future use of the Lifting Cover after vessel is placed in service will require that the Lifting Cover, the attachment welds and the vessel be inspected and evaluated before use.

Load Distribution During Lift

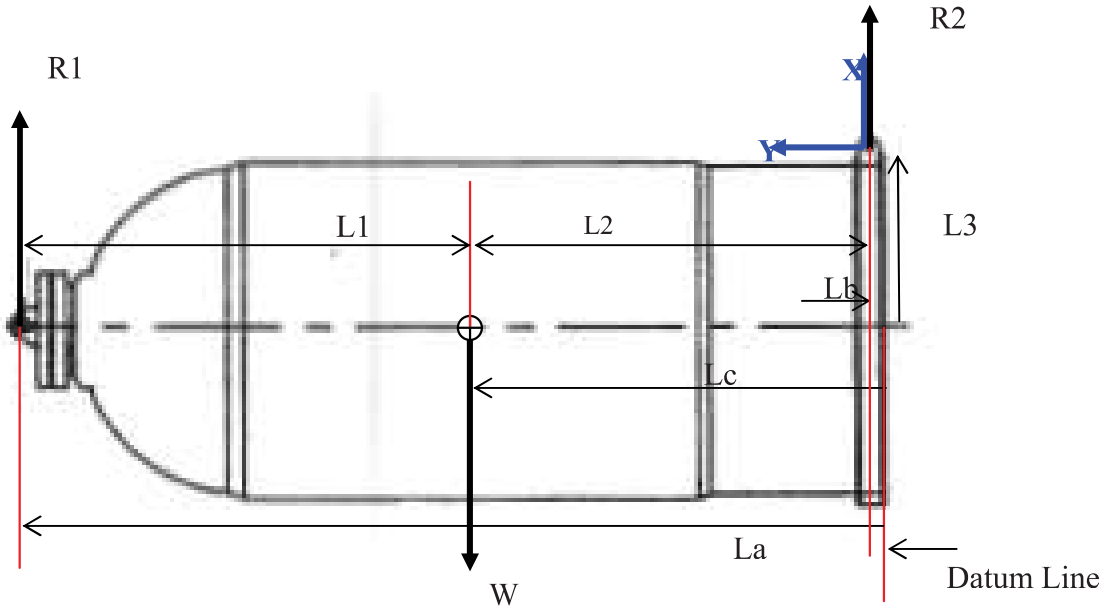

Mass center of the entire vessel from the datum line: Lc = 8512 mm (27.93 ft)
Distance of lifting lug from datum line: La = 14617 mm (47.96 ft)
Distance of tailing lug from datum line: Lb = 145 mm (0.48 ft)
Distance of lifting lug from mass center: L1 = La – Lc = 6105 mm (20.03 ft)
Distance of tailing lug from mass center: L2 = Lc–Lb = 8367 mm (27.45 ft)
Radial distance of tailing lug from mass center L3 = 1780 mm (5.84 ft)
Vessel erected weight: W = 54400 kgf (119.7 Kips) Based on Openso Code Calculation

Reaction at Lifting Lug and Tailing Lug:

- Maximum reaction for lifting lug:
  - PH = R1@0º = 31400 kgf (69.2 Kips) @ horizontal position
  - PV = R1@90º = 54400 kgf (119.7 Kips) @ vertical position
- Maximum reaction for tailing lug @ horizontal position
  - R2X = 23000 kgf (50.5 Kips)
- Reactions for lugs @ tilted position (65°)
-
  - R1X = 15290 kgf (33.7 Kips)
  - R1Y = 32750 kgf (72.2 Kips)
  - R2X = 7670 kgf (16.9 Kips)
  - R2Y = 16420 kgf (36.2 Kips)

Total Vessel Weight, kips 119.7 (54400 kgf)
Long. Distance from Lift Lug to C.G., ft. (A) 20.03 (6105mm)
Long. Distance from C.G. to Tailing Lug, ft. (B) 27.45 (8367mm)
Radial Distance from Vessel C.L. to Tailing Lug Hole, ft. 5.84 (1778mm)

Angle Deg	A ft.	B ft.	R1 kips	R2 kips	R2X kips	R2Y kips
0	20.03	27.45	69.2	50.5	50.5	0.0
5	19.95	27.85	69.7	50.0	49.8	4.4
10	19.73	28.05	70.3	49.4	48.7	8.6
15	19.35	28.03	70.8	48.9	47.2	12.7
20	18.82	27.79	71.4	48.3	45.4	16.5
25	18.15	27.35	71.9	47.8	43.3	20.2
30	17.35	26.69	72.6	47.1	40.8	23.6
35	16.41	25.84	73.2	46.5	38.1	26.7
40	15.34	24.78	73.9	45.8	35.1	29.4
45	14.16	23.54	74.7	45.0	31.8	31.8
50	12.88	22.12	75.7	44.0	28.3	33.7
55	11.49	20.53	76.7	43.0	24.6	35.2
60	10.02	18.78	78.1	41.6	20.8	36.1
65	8.47	16.89	79.7	40.0	16.9	36.2
70	6.85	14.88	82.0	37.7	12.9	35.5
75	5.18	12.75	85.1	34.6	9.0	33.4
80	3.48	10.52	90.0	29.7	5.2	29.3
85	1.75	8.21	98.7	21.0	1.8	20.9
90	0.00	5.84	119.7	0.0	0.0	0.0

Angle = Angle Between Vessel C.L. and Horizontal
R1 = Total Reaction at Top Lug
R2 = Total Reaction at Tailing Lug
R2X = Component of R2 Perpendicular to Vessel C.L.
R2Y = Component of R2 Parallel to Vessel C.L.

Lifting Cover Calculations:

GU16 (Ver. 9) - Lifting Cover Program (except calculation II-A-1, Ref. 1)

* * * Input * * *

1.	F = Impact Factor	=	1.50
2.	PV = Vertical Lift Load on Cover, kips	= 119.7	(54400 kgf)
3.	PH = Horizontal Lift Load on Cover, kips	= 69.20	(31400 kgf)
4.	L = Width of Lug at Base, in.	= 21.65	(550 mm)
5.	R = Radius of Lug at Top, in.	= 7.09	(180 mm)
6.	H = Shackle Hole Diameter, in.	= 3.38	(86 mm)
7.	DP = Diameter of Shackle Pin, in.	= 3.27	(83 mm)
8.	E = Dist. from Shackle Hole to Top of Cover, in...	= 9.57	(243 mm)
9.	TL = Lug Thickness, in.	= 2.953	(75 mm)
10.	BC = Bolt Circle Diameter, in.	= 42.88	(1089 mm)
11.	Tc = Cover Thickness, in.	= 2.953	(75 mm)
12.	WB = Size of Bevel Weld to Cover, in.	= 1.49	(38 mm)
13.	WF = Size of Fillet Weld to Cover, in.	= 1.45	(37 mm)
14.	SY = Yield Stress of Lug and Cover Material, ksi.	= 38.00	(2672 kgf/cm^2)
	A = Calculated Bolt Circle Radius, in.	= 21.44	(544.6 mm)

** References **

(1) 'Formulas for Stress and Strain' by R. J. Roark, 6th Ed, Table 24, Case 16

(2) 'Formulas for Stress and Strain' by R. J. Roark, 4th Ed, Roark, Table X, Case 5

(3) 'Formulas for Stress and Strain' by R. J. Roark, 4th Ed, Roark, Table X, Case 22

* * * Output * * *

I. LUG STRESSES

A. VERTICAL LIFT

1. Shear Stress at Pin Hole (SL1) = $\frac{Pv * F}{(2*R - H) * TL}$ = 5.63 KSI (395 kgf/cm^2)

2. Allowable Shear Stress (A1) = .4 * SY.....= 15.20 KSI (1069 kgf/cm^2)

3. Bearing Stress at Pin Hole (SL2) = $\frac{Pv * F}{DP * TL}$ = 18.59 KSI (1307 kgf/cm^2)

4. Allowable Bearing Stress (A2) = .9 * SY.....= 34.20 KSI (2405 kgf/cm^2)

B. HORIZONTAL LIFT

1. Bending Stress in Lug at Base (SL3)

$$SL3 = \frac{Ph * F * (E + Tc/2) * 6}{TL * L^2} = 4.74 \text{ KSI} \quad (333 \text{ kgf/cm}^2)$$

2. Allowable Bending Stress (A3) = .66 * SY.....= 25.08 KSI (1763 kgf/cm^2)

II. COVER STRESSES

A. VERTICAL LIFT

1. Bending Stress in Cover (SVC) ** (Ref. 1) **

$$SVC = \frac{3*F*Pv}{2*PI*Tc^2} * [1.3*\ln(A/B) + \tfrac{3}{4} * 0.7] = 25.08 \text{ KSI} \quad (1763 \text{ kgf.cm}^2)$$

B = (L * TL / PI)^0.5 PI = 3.1416

2. Allowable Bending Stress (A4) = .75 * SY.....= 28.50 KSI (2004 kgf/cm^2)

B. HORIZONTAL LIFT

1. Bending Stress in Cover (SHC) ** (Ref. 2) **

$$SHC = \frac{3*F*Ph*(E+Tc/2)*[1+1.3*LN\{2*(A-ro)/(K*A)\}]}{4 * PI * ro * Tc^2} = 15.12 \text{ KSI} \quad (1063 \text{ kgf/cm}^2)$$

K = .49 * A^2 / (ro + 0.7*A)^2 ro = B

2. Allowable Bending Stress (A4) = .75 * SY..... = 28.50 KSI (2004 kgf/cm^2)

III. WELD STRESSES

A. VERTICAL LIFT

1. Shear Stress in Weld (SVW)

$$SVW = \frac{1}{4*TEW} * \left[\frac{(Pv*F)^2}{(L+TL)^2} + (SWC*Tc)^2\right]^{0.5} = 13.16 \text{ KSI} \quad (925 \text{ kgf/cm}^2)$$

If WF < WB: TEW = [(WB-.125)^2 + WF^2]^0.5

Otherwise: TEW = .707*(WB+WF-.125)

** (Ref. 3) **

$$SWC = \frac{3*Pv*F}{2*PI*Tc^2} * \left[\frac{2*A^2*1.3*LN(A/B) + 0.7*A^2 - 0.7*B^2}{1.3 * A ^ 2 + .7 * B ^ 2;}\right] = (34.88)$$

2. Allowable Shear Stress (A1) = .4 * SY.....= 15.20 KSI (1069 kgf.cm^2)

B. HORIZONTAL LIFT

1. Shear Stress in Weld (SHW)

$$SHW = \frac{1}{TEW} * \left[\frac{(SHC*Tc)^2}{16} + \frac{(Ph*F)^2}{16*(L+TL)^2} + \frac{\{F*Ph*(E+Tc/2)\}^2}{4*\{L*TL+(L^2)/3\}^2}\right]^{0.5} = 5.85 \text{ KSI} \quad (411 \text{ kgf/cm}^2)$$

2. Allowable Shear Stress (A1) = .4 * SY.....= 15.20 KSI (1069 kgf/cm^2)

IV. COVER BOLTING STRESSES

Bolting Material..... SA-193-B7
D = Diameter of Bolts..... 1-5/8" -8 UNC
As = Bolt Root Diameter..... 10.84 cm^2
Nb = Number of Bolts..... 32
Sy = Min Yield Stress..... 7382 Kgf/cm^2
Su = Min Ultimate Stress..... 8788 Kgf/cm^2
Sa = Allowable Stress..... 1757 Kgf/cm^2

References

'Pressure Vessel Design Manual' by Dennis Moss 3rd Ed, Chapter 7.7

A. HORIZONTAL LIFT

αn	0	5.625	16.875	28.125	39.375	50.625	61.875	73.125	84.375
cos αn	1	0.995	0.957	0.882	0.773	0.634	0.471	0.290	0.098
Xn	0	53.370	158.060	256.676	345.427	420.904	480.206	521.054	541.878
Nb	0	4	4	4	4	4	4	4	4
Mu	0	212.453	605.016	905.470	1068.075	1068.075	905.470	605.016	212.453
Ma	0	1.95E+06	5.56E+06	8.32E+06	9.81E+06	9.81E+06	8.32E+06	5.56E+06	1.95E+06
Fn	0	9144.5	8793.1	8103.8	7103.0	5829.3	4331.5	2667.4	900.7
σt	0	843.7	811.3	747.7	655.3	537.8	399.6	246.1	83.1

M1= 5.13E+07 M1= F*PH*BC
Σ Mu = 5582
Ma = Mu * M1 / Σ Mu
Fn = Ma / (Xn * Nb)
σt = Fn / As
Tb = 6.67E+04 Tb = 0.7*Su*As

σt Bolt, max = 843.7 Kgf/cm^2 < Sa(1757Kgf/cm^2)

τt = PH *F / (Nb * As) = 135.8 Kgf/cm^2

Allowable Shear Stress = 1054 Kgf/cm^2 (1-σt*As/Tb)
909.4 Kgf/cm^2

B. VERTICAL LIFT

σt Bolt = PV * F / (Nb * As) = 235.3 Kg/cm^2 < Sa (1757 Kgf/cm^2)

Tailing Lug Calculations:

Input values used for these calculations reference drawing DE-5725.00-2316-570-BAR-305 Rev.0 detail views "SKIRT BASE (BL01)" and "TAILING LUG (BL06)" and sketches on Sheets 85 & 86

Load per Lug in Horizontal Position.	PH = 50.5 kips (23000 kgf)
Load per Lug in Tilted Position (Horizontal)	R2X = 16.9 kips (7670 kgf)
Load per Lug in Tilted Position (Vertical)	R2Y = 36.2 kips (16420 kgf)
Impact Factor	F = 1.5
Lug Thickness	T = 1.476 in. (37.5 mm)
Radius of Lug At Top.	R = 4.41 in. (112 mm)
Pin Hole Diameter	H = 2.87 in. (73 mm)
Shackle Pin Diameter.	DP = 2.76 in. (70 mm)
Height of Lug …….	h = 8.82 in. (224 mm)
Distance from Bottom Ring Edge to Pin Hole Center …	L1 = 1.57 in. (40 mm)
Mean diameter of the skirt	DS = 123.82 in. (3145 mm)
Length of Weld Lug to Top Ring	LW1 = 6.30 in. (160 mm)
Length of Weld Lug to Base Ring	LW2 = 6.30 in. (160 mm)
Weld size Lug to Top Ring	WS1 = 0.87 in. (22 mm)
Weld size Lug to Base Ring …….	WS2 = 0.87 in. (22 mm)
Weld size Lug to skirt …….	WS3 = 0.63 in (16 mm)
Yield Stress of Lug Material.	YL = 36 ksi (2530 kgf/cm^2)
Yield Stress of Ring Material.	YR = 36 ksi (2530 kgf/cm^2)
Yield Stress of Skirt Material	YS = 32 ksi (2250 kgf/cm^2)

1. Lug Stresses

1.1 Shear Stress at Pin Hole: $\dfrac{PH * F}{2 * (R - .5 * H) * T}$ = 8.60 ksi (605 kgf/cm^2)

Allowable Shear Stress: 0.4 * YL = 14.40 ksi (1010 kgf/cm^2)

1.2 Bearing Stress at Pin Hole: $\dfrac{PH * F}{T * DP}$ = 18.54ksi (1304 kgf/cm^2)

Allowable Bearing Stress: 0.9 * YL = 32.40 ksi (2280 kgf/cm^2)

1.3 Stresses on the Lug

1.3.1 Bending Stress

Bending Moment: Mb = R2Y * F * L1 = 85.25 in-kips (9820 kgf-m)

$$\sigma_bending = \frac{6 * Mb}{T * h^2} = 4.44 \text{ ksi } (312 \text{ kgf/cm}^2)$$

1.3.2 Axial Stress:

$$\sigma_axial = \frac{R2X * F}{T * h} = 1.94 \text{ ksi } (136 \text{ kgf/cm}^2)$$

1.3.3 Total Stress:

$\sigma_total = \sigma_bending + \sigma_axial$ = 6.38 ksi (450 kgf/cm^2)

Allowable Bending Stress: 0.66 * YL = 23.76 ksi (1670 kgf/cm^2)

2. Weld

2.1 Weld : Lug to top ring

$$\tau = \frac{(PH / 2) * F}{2 * LW1 * WS1 * 0.707} = 4.89 \text{ ksi } (344 \text{ kgf/cm}^2)$$

Allowable Stress = 0.4 * YR = 14.40 ksi (1010 kgf/cm^2)

2.2 Weld : Lug to base ring

$$\tau = \frac{(PH / 2) * F}{2 * LW2 * WS2 * 0.707} = 4.89 \text{ ksi } (344 \text{ kgf/cm}^2)$$

Allowable Stress = 0.4 * YR = 14.40 ksi (1010 kgf/cm^2)

2.3 Weld : Lug to skirt

$$\tau = \frac{R2Y * F}{4 * h * WS3 * 0.707} = 3.46 \text{ ksi } (243 \text{ kgf/cm}^2)$$

Allowable Stress = 0.4 * YS = 12.80 ksi (900 kgf/cm^2)

Strength Calculation for Base Ring Assembly:

Top (Compression) Ring and Base Ring

K-2316004 Base Rings Stresses (GU-28)

GU28 (Ver. 8) - Ring Loading Program

Ref.: 'Formulas for Stress & Strain', 5th Ed., By Roark & Young
Table 17, Pages 220-237

Case Unit Load,w Force,W Moment Theta Phi Radius p
18 0.0 -75.75 0.0 0.0 0.0 61.41 0.0

Section Modulus S = 48.50 in^3
Area A = 32.13 in^2 per GU-07
Allowable Bending + Hoop Stress: 0.66Sy = 23.8 ksi (1673 kgf/cm^2)
Allowable Radial Shear Stress: 0.4 Sy =
14.4 ksi (1010 kgf/cm^2)

Degrees	M (in-Kips)	V (Kips)	T (Kips)	Bending Stress (ksi)	Hoop Stress (ksi)	Bending + Hoop Stress (ksi)	Radial Shear Stress (ksi)
0.0	-370.2	0	-18.1	-7.6	-0.6	8.2	0.0
5.0	-366	1.6	-17.9	-7.5	-0.6	8.1	0.0
10.0	-353.4	3.1	-17.4	-7.3	-0.5	7.8	0.1
15.0	-332.6	4.6	-16.7	-6.9	-0.5	7.4	0.1
20.0	-304.1	6	-15.6	-6.3	-0.5	6.8	0.2
25.0	-268.3	7.3	-14.2	-5.5	-0.4	6.0	0.2
30.0	-225.9	8.5	-12.5	-4.7	-0.4	5.0	0.3
35.0	-177.7	9.5	-10.6	-3.7	-0.3	4.0	0.3
40.0	-124.5	10.3	-8.4	-2.6	-0.3	2.8	0.3
45.0	-67.4	11	-6.1	-1.4	-0.2	1.6	0.3
50.0	-7.5	11.4	-3.6	-0.2	-0.1	0.3	0.4
55.0	54.1	11.6	-0.9	1.1	0.0	1.1	0.4
60.0	116.2	11.5	1.9	2.4	0.1	2.5	0.4
65.0	177.3	11.2	4.8	3.7	0.1	3.8	0.3
70.0	236.2	10.7	7.7	4.9	0.2	5.1	0.3
75.0	291.6	9.9	10.6	6.0	0.3	6.3	0.3
80.0	342	8.9	13.4	7.1	0.4	7.5	0.3
85.0	386.1	7.6	16.2	8.0	0.5	8.5	0.2
90.0	422.6	6	18.9	8.7	0.6	9.3	0.2
95.0	450.3	4.3	21.5	9.3	0.7	10.0	0.1
100.0	467.9	2.3	23.9	9.6	0.7	10.4	0.1
105.0	474.4	0.1	26	9.8	0.8	10.6	0.0
110.0	468.7	-2.3	27.9	9.7	0.9	10.5	-0.1
115.0	450	-4.8	29.6	9.3	0.9	10.2	-0.1
120.0	417.4	-7.4	30.9	8.6	1.0	9.6	-0.2
125.0	370.4	-10.1	31.9	7.6	1.0	8.6	-0.3
130.0	308.5	-13	32.6	6.4	1.0	7.4	-0.4
135.0	231.4	-15.8	32.9	4.8	1.0	5.8	-0.5
140.0	138.9	-18.7	32.8	2.9	1.0	3.9	-0.6

Degrees	M (in-Kips)	V (Kips)	T (Kips)	Bending Stress (ksi)	Hoop Stress (ksi)	Bending + Hoop Stress (ksi)	Radial Shear Stress (ksi)
145.0	31.1	-21.5	32.3	0.6	1.0	1.6	-0.7
150.0	-91.8	-24.3	31.4	-1.9	1.0	2.9	-0.8
155.0	-229.4	-27	30.2	-4.7	0.9	5.7	-0.8
160.0	-381.1	-29.6	28.5	-7.9	0.9	8.7	-0.9
165.0	-546.1	-32	26.5	-11.3	0.8	12.1	-1.0
170.0	-723.5	-34.2	24	-14.9	0.7	15.7	-1.1
175.0	-912	-36.2	21.2	-18.8	0.7	19.5	-1.1
180.0	-1110.5	-37.9	18.1	-22.9	0.6	23.5	-1.2

Maximum Bending + Hoop Stress = 23.5 ksi (1652 kgf/cm^2)
Sa = 0.66 Sy = 23.8 ksi (1673 kgf/cm^2)
Maximum Bending + Hoop Stress < Sa OK

Maximum Radial Shear Stress = 1.2 ksi (85 kgf/cm^2)
Sa < 0.4 Sy = 14.4 ksi (1010 kgf/cm^2)
Maximum Radial Shear Stress < Sa OK

*) Stresses were calculated as follows:
Bending stress = M / Sb
Hoop stress = T / A
Radial shear stress = V / A

GU07 (Ver. 5) - Section Properties

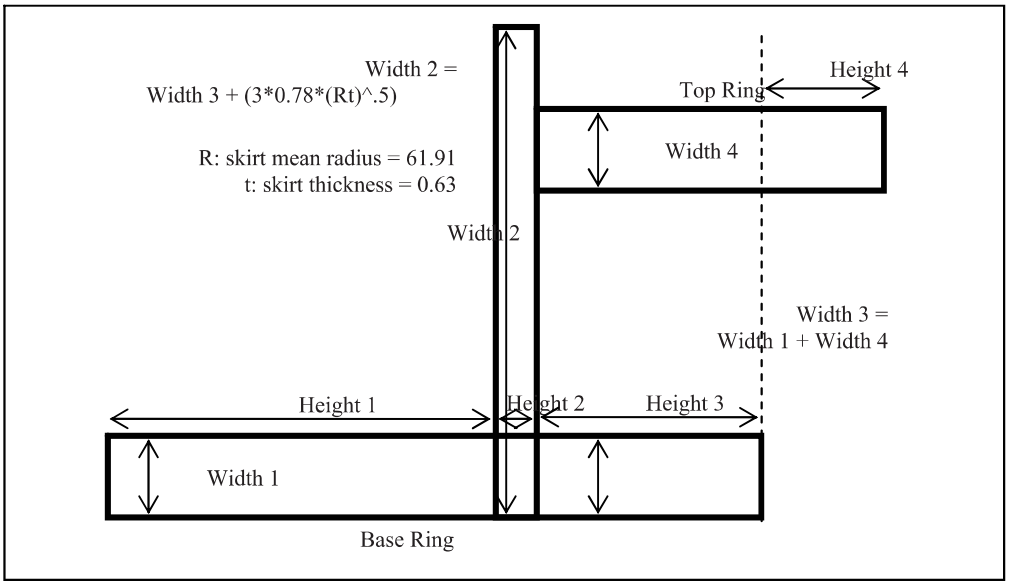

Section Described by Stacked Rectangles
'X' is Measured From Base of First Rectangle

No.	Width	Height	A	X	A.X	A.X.X	I
1	1.250	8.440	10.55	4.22	44.52	187.88	62.63
2	17.110	0.630	10.78	8.76	94.37	826.23	0.36
3	2.500	2.340	5.85	10.24	59.90	613.42	2.67
4	1.250	3.960	4.95	13.39	66.28	887.50	6.47
	15.370	32.13			265.08	2515.03	72.12

Depth, D = 15.370 in. Area, A = 32.13 in.^2

Distances to C.A.:
Xb = 265.08 / 32.13 = 8.25 in. (From Base of First Rectangle)
Xt = 15.37 - 8.25 = 7.12 in. (From Top of Last Rectangle)

Moment of Inertia:
I = 72.12 + 2515.03 - 32.13 X 8.25 X 8.25
= 400.16 in.^4

Section Modulus:
Sb = 400.16 / 8.25 = 48.50 in.^3
St = 400.16 / 7.12 = 56.20 in.^3

Radius of Gyration:
R = Square Root (400.16 / 32.13) = 3.53 in.

Elbow Lifting Lug Calculation:

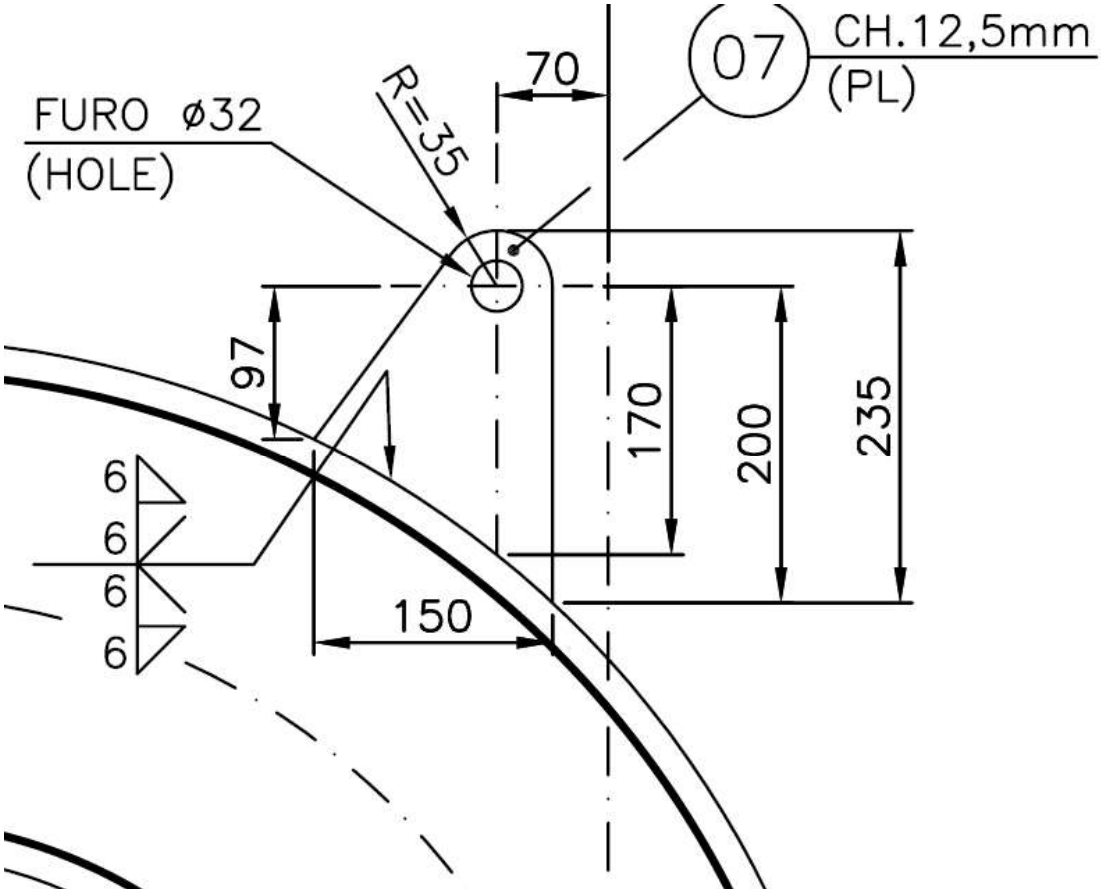

USE 8.5 Ton Shackle Model G-4163 Green Pin “GUNNEBO”
Lug Material: SA-387-11CL2
Thickness: 12.5 mm
Allowable Tensile Stress: 1896 kgf/cm^2
Allowable shear stress: 1264 kgf/cm^2
Allowable bearing stress: 2845 kgf/cm^2

Elbow Material: SA-234-WP11
Thickness: Ø12” SCH.XS (12.5mm)
Yield Stress: 2109 kgf/cm^2

WT of assembly: 1300 kgm
Impact Factor: 2

Shear at pin hole:
$\tau = 2(1300)*100/(2*35-32)(12.5) = 548$ kgf/cm^2 < 1264 kgf/cm^2 **OK**

Bearing at pin hole:
$s = 2(1300)*100/(12.5*28) = 743$ kgf/cm^2 < 2845 kgf/cm^2 **OK**

Lug axial stress:
s = 2(1300)*100/(12.5*150) = 139 kgf/cm^2 < 1896 kgf/cm^2 **OK**

Lug bending stress:
s = 6*(2(1300))*40*100/(12.5*150^2) = 221.9 kgf/cm^2 < 1896 kgf/cm^2 **OK**

Weld is full strength + fillet weld therefore by inspection is OK

Check the stress in wall of Elbow:
Using Bednar line load method

Length of attachment: L = ((200 – 97)^2 + 150^2)^0.5 / 25.4 = 7.16 in.
M = (2(1300)2.2)*1.575 = 9009 in-lbs
Z_L = 7.16^2 / 6 = 8.55 in^2
f1 = M/ Z_L = 9009 / 7.16 = 1054 lbs/in
S1 = 1.17(Rt)$^{1/2}$f1/t^2 = 1.17(6.129 *0.5) $^{1/2}$(1054)/(0.5)^2= 8,635 psi = 607 kgf/cm^2

P = 2(1300)2.2 = 5720 lbs
f3 = P/L = 5720 / 7.16 = 799 lbs/in
S3 = 1.75(Rt)$^{1/2}$f3/t^2 = 1.75(6.129 *0.5) $^{1/2}$(799)/(0.5)^2= 9,791 psi = 688 kgf/cm^2
S1+ S3 = 607 + 688 = 1295 kgf/cm^2 < Sy = 2109 kgf/cm^2 **OK**